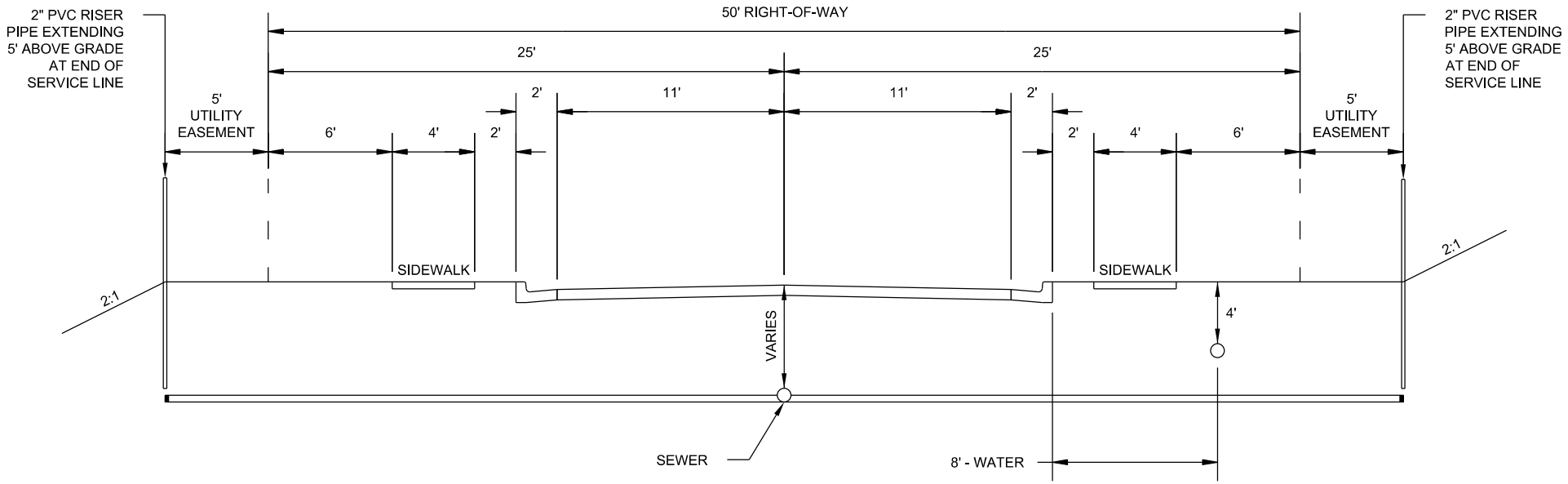

NOTES:

1. NO TREES OR FENCES ALLOWED WITHIN THE ROAD R/W OR UTILITY EASEMENT EXCEPT WHERE REQUIRED BY CITY, COUNTY, OR OTHER GOVERNMENT ORDINANCE.
2. ALL TREES SHALL BE CLEARED AND SHOULDERS GRADED WITHIN 6" OF FINAL GRADE (INCLUDING UTILITY EASEMENT) PRIOR TO THE INSTALLATION OF ANY UTILITIES.
3. UTILITY PLACEMENT SHALL REMAIN CONSISTENT FROM BACK OF CURB THROUGHOUT THE PROJECT REGARDLESS OF ANY INCONSISTENCIES IN ROAD CONSTRUCTION. EXAMPLES: STORM SEWERS, CULVERTS, CUL-DE-SACS, ETC...(EXCEPT CATV).
4. TOTAL CLEARED AND GRADED WIDTH TO BE 60' MINIMUM. ELECTRIC, GAS, TELEPHONE, AND CABLE TELEVISION.
5. PROPERTY CORNER REFERENCE SHALL BE PLACED ON CURB AND GUTTER AND ON 10' OFFSET STAKE.
6. UTILITY EASEMENT SHALL BE SHOWN AND RECORDED WITH THE FINAL PLAT.
7. WATER METER BOXES SHALL BE LOCATED 6' BACK OF R/W. SEWER SERVICES SHALL BE STUBBED OUT 17' BACK OF CURB.
8. WATER LATERALS SHALL BE MARKED WITH A BLUE "W" ON CURB. SEWER LATERALS SHALL BE MARKED WITH A GREEN "X" ON CURB.
9. DEPTH REQUIREMENTS INDICATE MINIMUM DEPTH AT TIME OF INSTALLATION BELOW CURB LINE.
10. THIS STANDARD MAY BE COMBINED WITH JOINT USE STANDARD.
11. UTILITIES SHALL BE LOCATED WITHIN PLUS/MINUS 6" OF PLAN LOCATION.

HENRY COUNTY WATER AUTHORITY

RESIDENTIAL UTILITY PLACEMENT FOR ROAD WITH 50' RIGHT-OF-WAY

REVISED: 09/11/2018

SCALE: N.T.S.

DETAIL NO.

S01

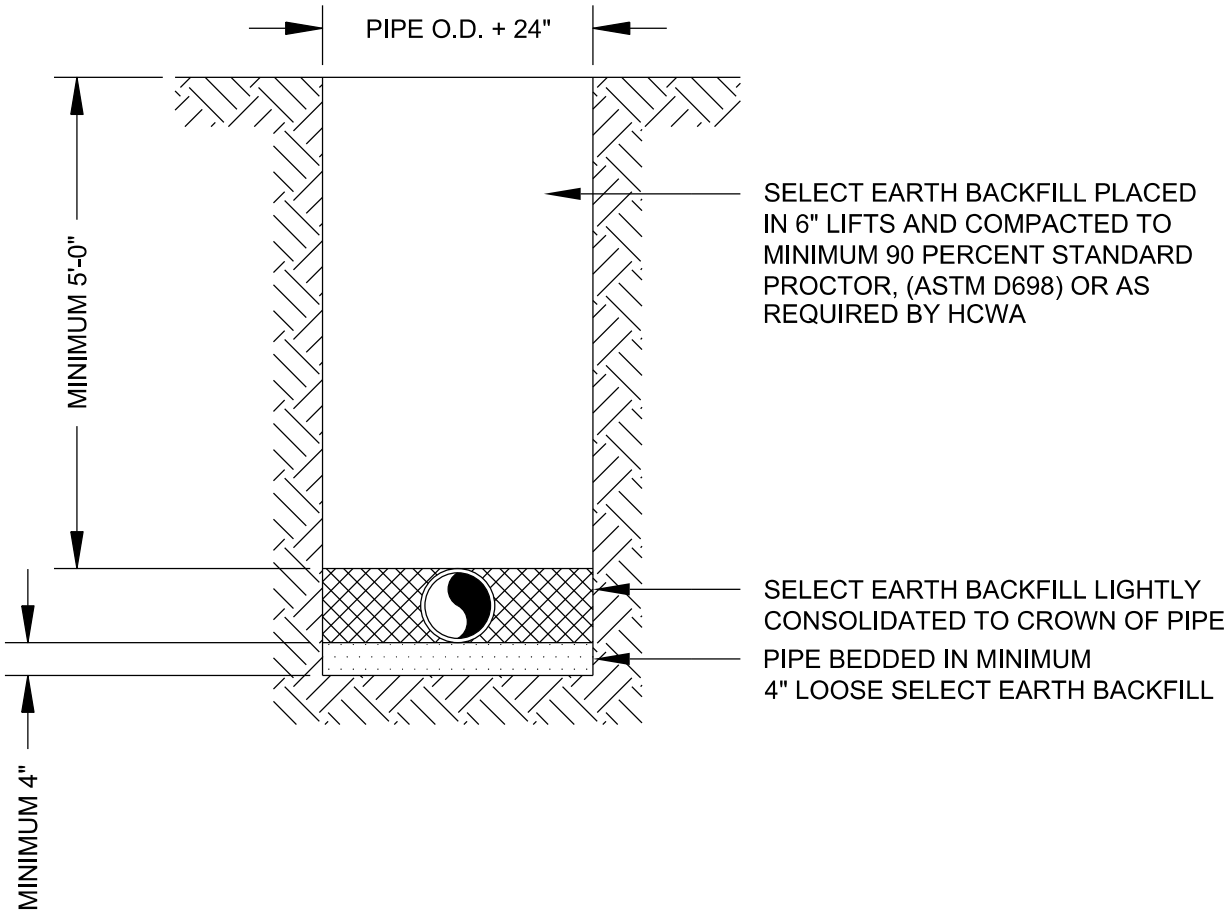

NOTES:

1. DUCTILE IRON PIPE FOR SANITARY SEWAGE FORCE MAINS SHALL BE BEDDED IN ACCORDANCE WITH ANSI/AWWA C150/A21.50 AND ANSI/AWWA C151/A21.51, TYPE 3 LAYING CONDITION.

2. MINIMUM DEPTH OF COVER SHALL BE 5'-0" UNLESS OTHERWISE APPROVED BY HCWA.

HENRY COUNTY WATER AUTHORITY

DUCTILE IRON SANITARY SEWAGE FORCE MAIN TRENCH DETAIL

REVISED: 02/07/2018

SCALE: N.T.S.

DETAIL NO.

S02

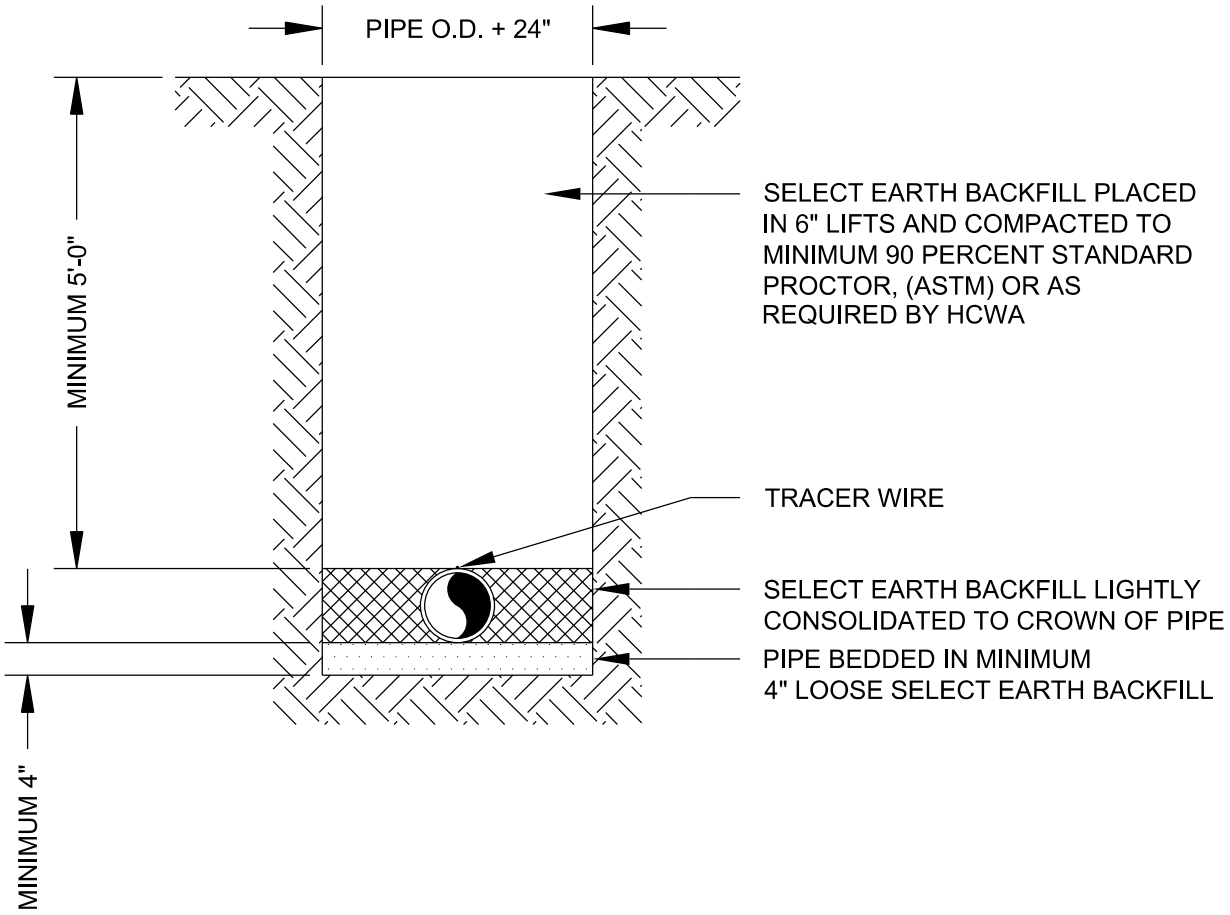

NOTES:

1. C900 POLYVINYL CHLORIDE (PVC) PIPE FOR SANITARY SEWAGE FORCE MAINS SHALL BE BEDDED IN ACCORDANCE WITH AWWA C605, TYPE 3 LAYING CONDITION.
2. MINIMUM DEPTH OF COVER SHALL BE 5'-0" UNLESS OTHERWISE APPROVED BY HCWA.
3. MAXIMUM DEPTH OF COVER SHALL BE 16'-0".
4. TRACER WIRE SHALL BE INSTALLED ON ALL SANITARY SEWAGE FORCE MAINS.

HENRY COUNTY WATER AUTHORITY

C900 PVC SANITARY SEWAGE FORCE MAIN TRENCH DETAIL

REVISED: 02/07/2018

SCALE: N.T.S.

DETAIL NO.

S03

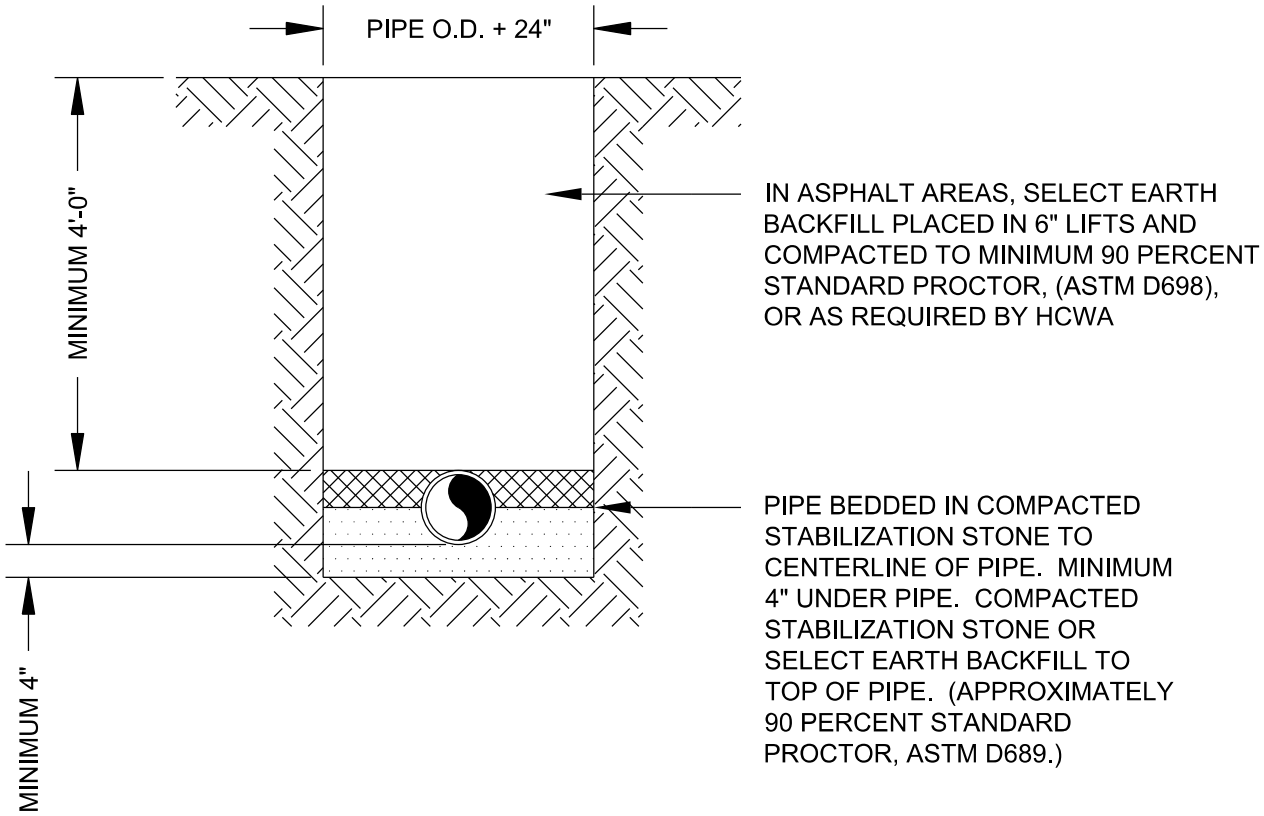

NOTES:

1. DUCTILE IRON PIPE FOR SANITARY SEWER GRAVITY LINES SHALL BE BEDDED IN ACCORDANCE WITH ANSI/AWWA C150/A21.50 AND ANSI/AWWA C151/A21.51, TYPE 5 LAYING CONDITION.

HENRY COUNTY WATER AUTHORITY

DUCTILE IRON GRAVITY SEWER TRENCH DETAIL

REVISED: 02/16/2018

SCALE: N.T.S.

DETAIL NO.

S04

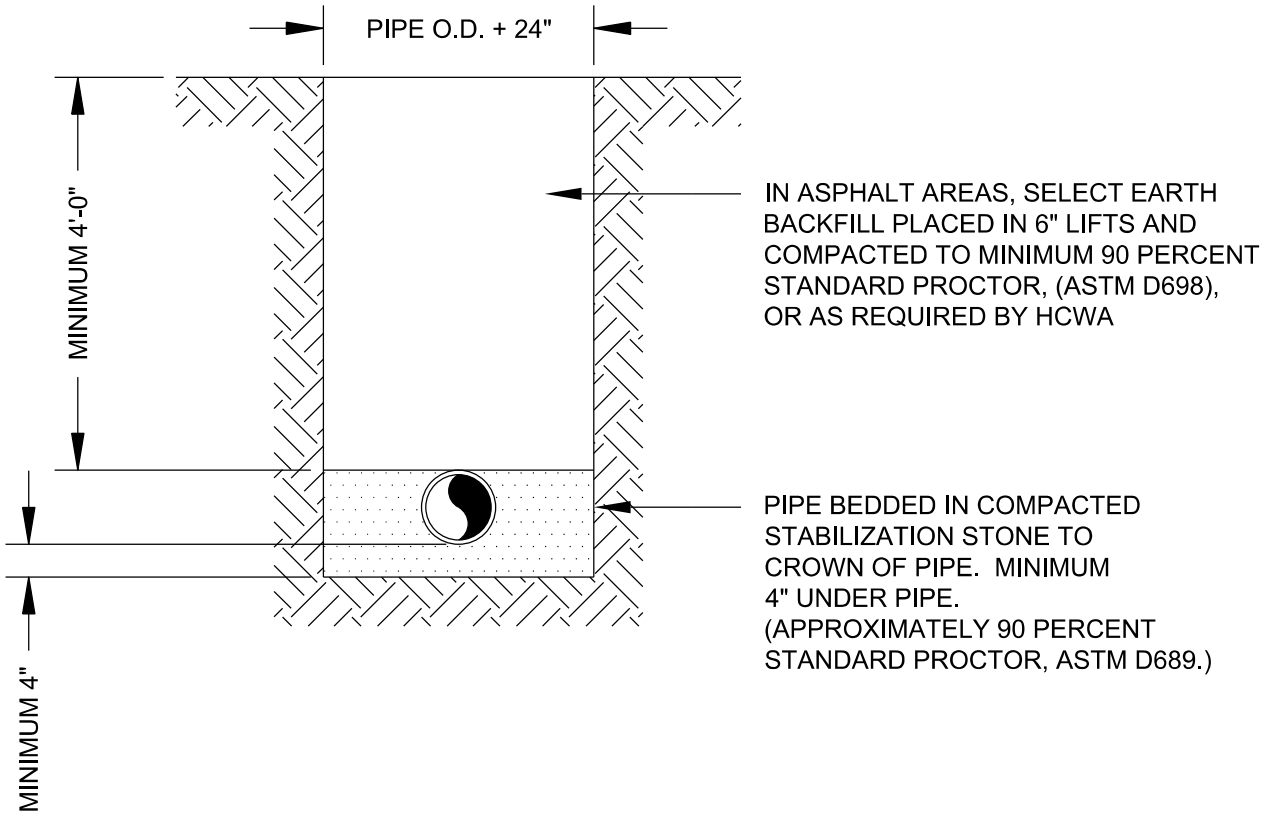

NOTES:

1. SDR 35/ SDR 26 POLYVINYL CHLORIDE (PVC) PIPE FOR SANITARY SEWER GRAVITY LINES SHALL BE BEDDED IN ACCORDANCE WITH AWWA C605, TYPE 5 LAYING CONDITION.

2. MAXIMUM DEPTH OF COVER SHALL BE 16'-0".

HENRY COUNTY WATER AUTHORITY		
	SDR 35/SDR 26 GRAVITY SEWER TRENCH DETAIL	REVISED: 02/16/2018
		SCALE: N.T.S.
		DETAIL NO. S05

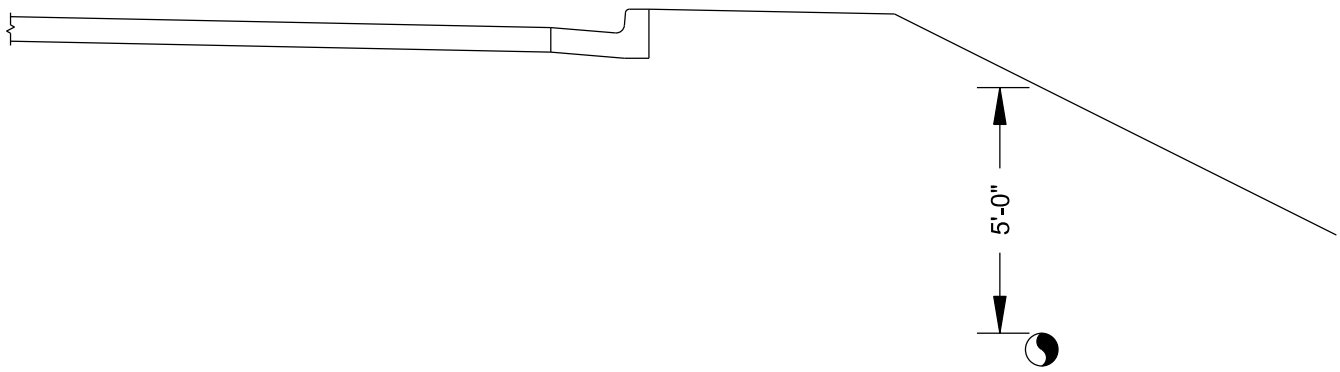

PIPE DEPTH WITH DECLINING GRADE AT EDGE OF PAVEMENT

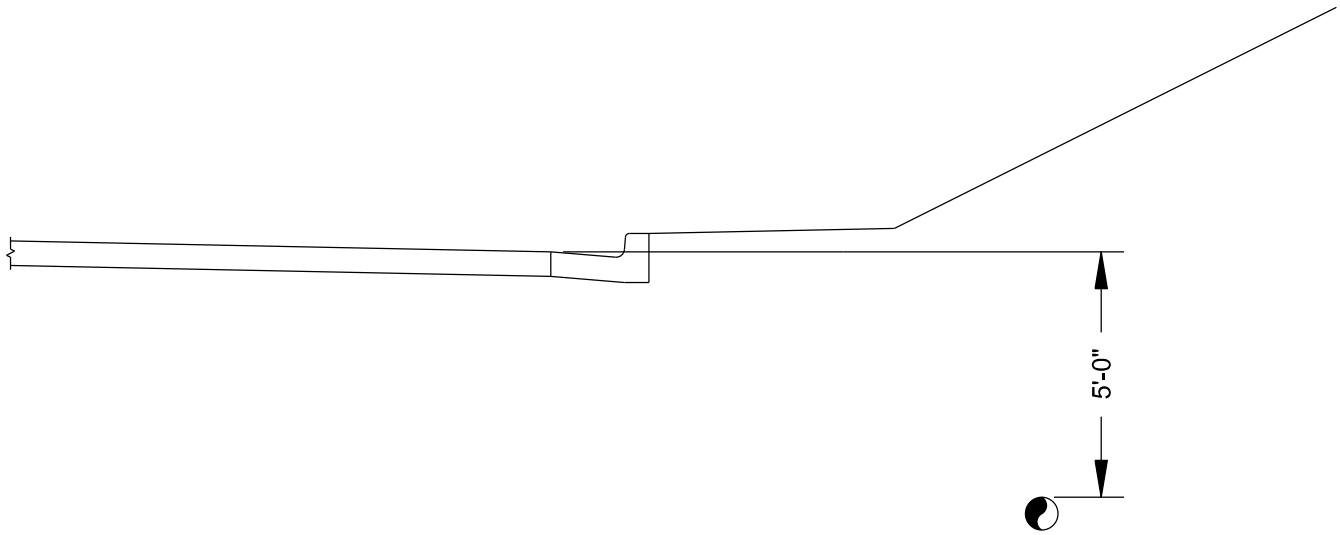

PIPE DEPTH WITH INCREASING GRADE AT EDGE OF PAVEMENT

NOTES:

1. SANITARY SEWAGE FORCE MAINS SHALL HAVE A MINIMUM DEPTH OF COVER OF 5'-0" UNLESS OTHERWISE APPROVED BY HCWA.

HENRY COUNTY WATER AUTHORITY		
	PIPE DEPTH AT EDGE OF PAVEMENT	REVISED: 09/11/2018
		SCALE: N.T.S.
		DETAIL NO. S06

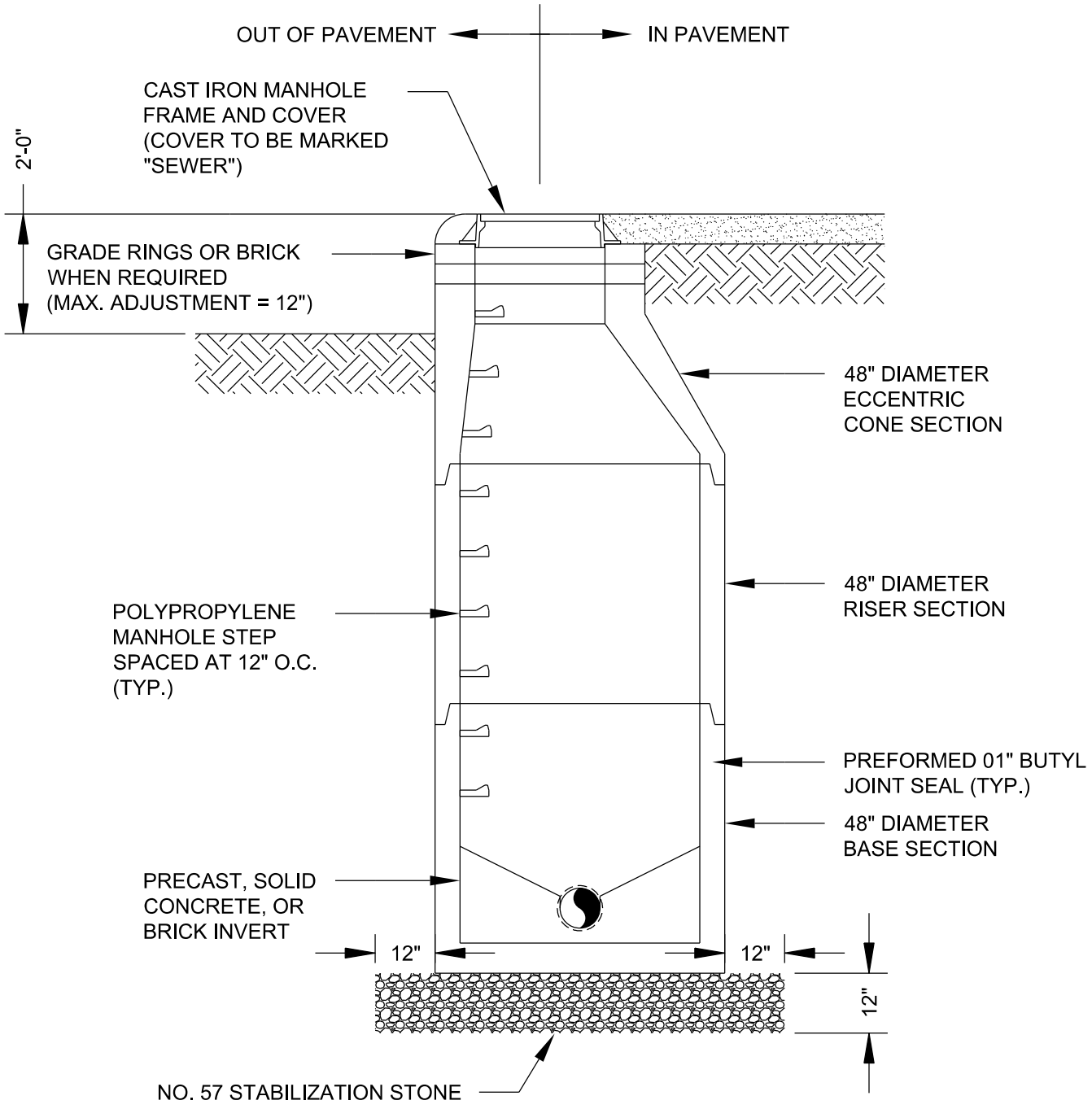

NOTES:

1. MANHOLES LOCATED OUTSIDE OF PAVEMENT SHALL HAVE WATER TIGHT BOLT-DOWN LIDS AND 2 FEET ABOVE FINISHED GRADE WITH FRAME CAST INTO THE CONE SECTION.

2. MANHOLES SHALL HAVE A MINIMUM DROP OF 0.10 FEET FROM INFLUENT INVERT TO EFFLUENT INVERT.

HENRY COUNTY WATER AUTHORITY

STANDARD SANITARY SEWER MANHOLE

REVISED: 09/11/2018

SCALE: N.T.S.

DETAIL NO.

S07

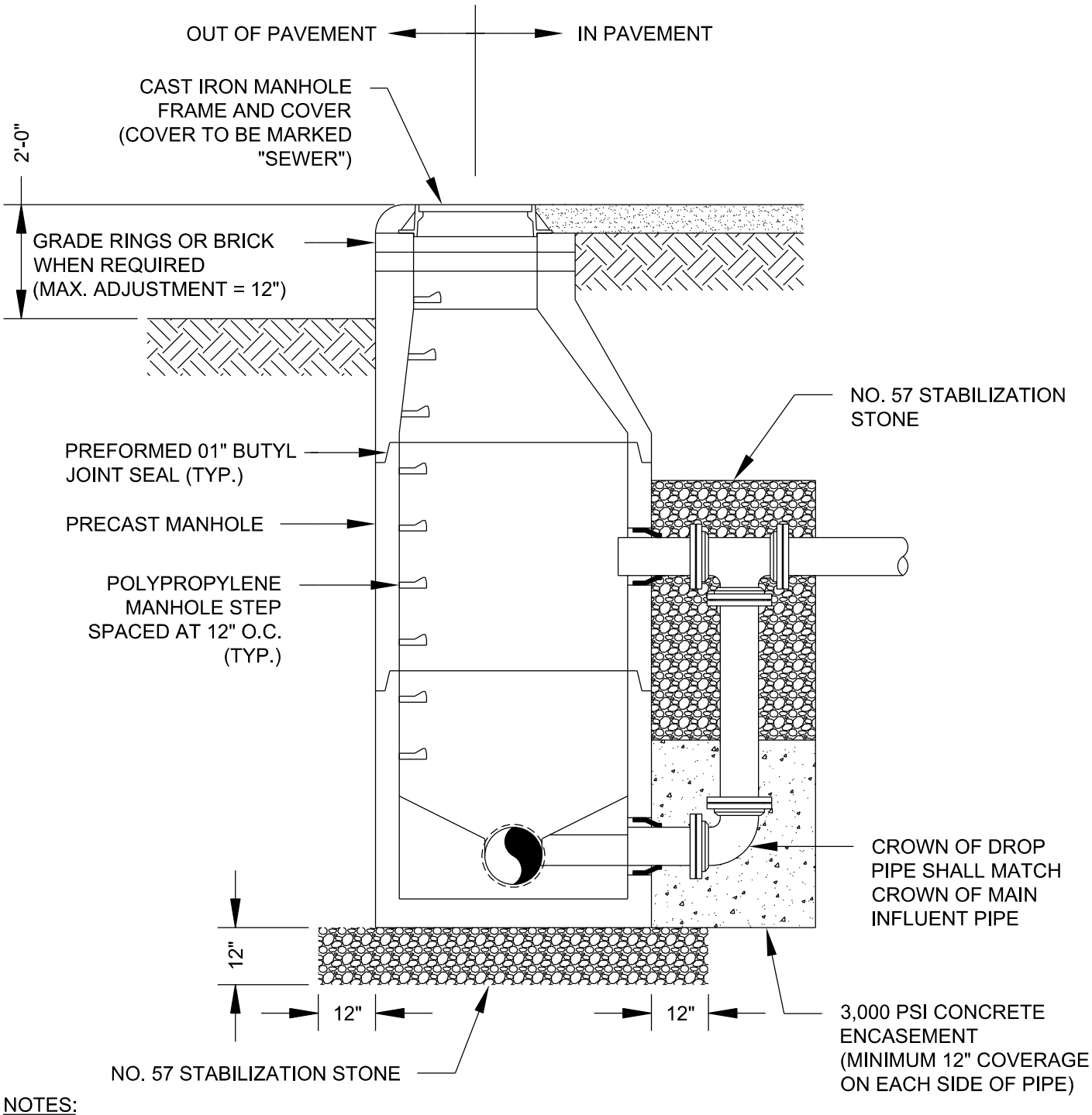

NOTES:

1. OUTSIDE DROPS REQUIRED WHEN INSIDE DROP IS GREATER THAN 2 FEET.
2. MANHOLES LOCATED OUTSIDE OF PAVEMENT SHALL HAVE WATER TIGHT BOLT-DOWN LIDS AND 2 FEET ABOVE FINISHED GRADE WITH FRAME CAST INTO THE CONE SECTION.
3. PIPE ENCASED IN CONCRETE SHALL BE WRAPPED WITH MINIMUM 10 MIL PLASTIC.

HENRY COUNTY WATER AUTHORITY

SANITARY MANHOLE WITH OUTSIDE DROP

REVISED: 09/11/2018

SCALE: N.T.S.

DETAIL NO.

S08

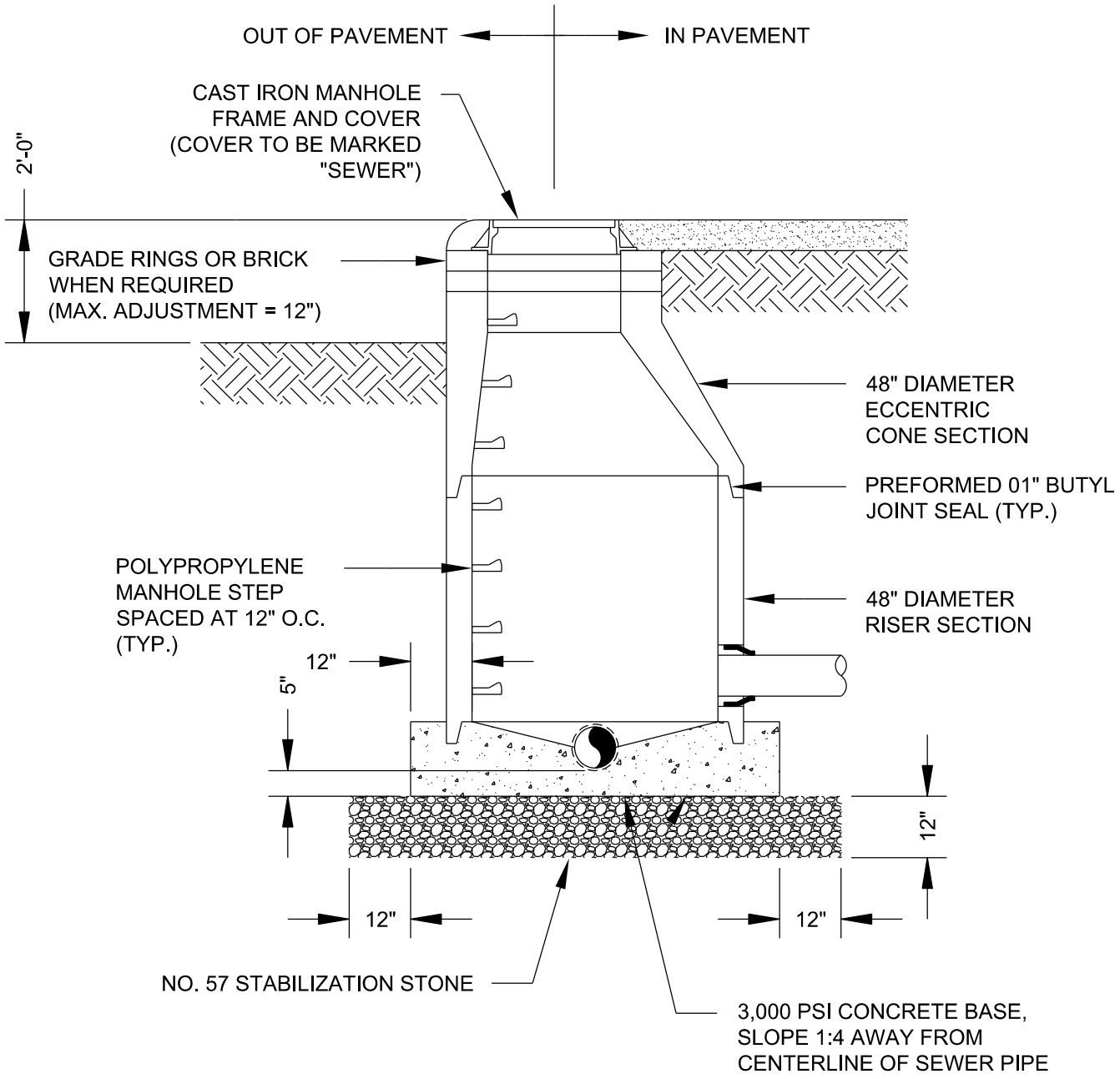

NOTES:

1. ALL JOINTS AROUND EXISTING AND PROPOSED SEWER LINE SHALL BE GROUTED WATERTIGHT.
2. AFTER DOGHOUSE MANHOLE CONSTRUCTION IS COMPLETE, TOP HALF OF EXISTING SEWER LINE SHALL BE CUT OUT USING A METHOD APPROVED BY THE HCWA INSPECTOR.
3. MANHOLES LOCATED OUTSIDE OF PAVEMENT SHALL HAVE WATER TIGHT BOLT-DOWN LIDS AND 2 FEET ABOVE FINISHED GRADE WITH FRAME CAST INTO THE CONE SECTION.

HENRY COUNTY WATER AUTHORITY

SANITARY SEWER DOGHOUSE MANHOLE

REVISED: 09/11/2018

SCALE: N.T.S.

DETAIL NO.

S09

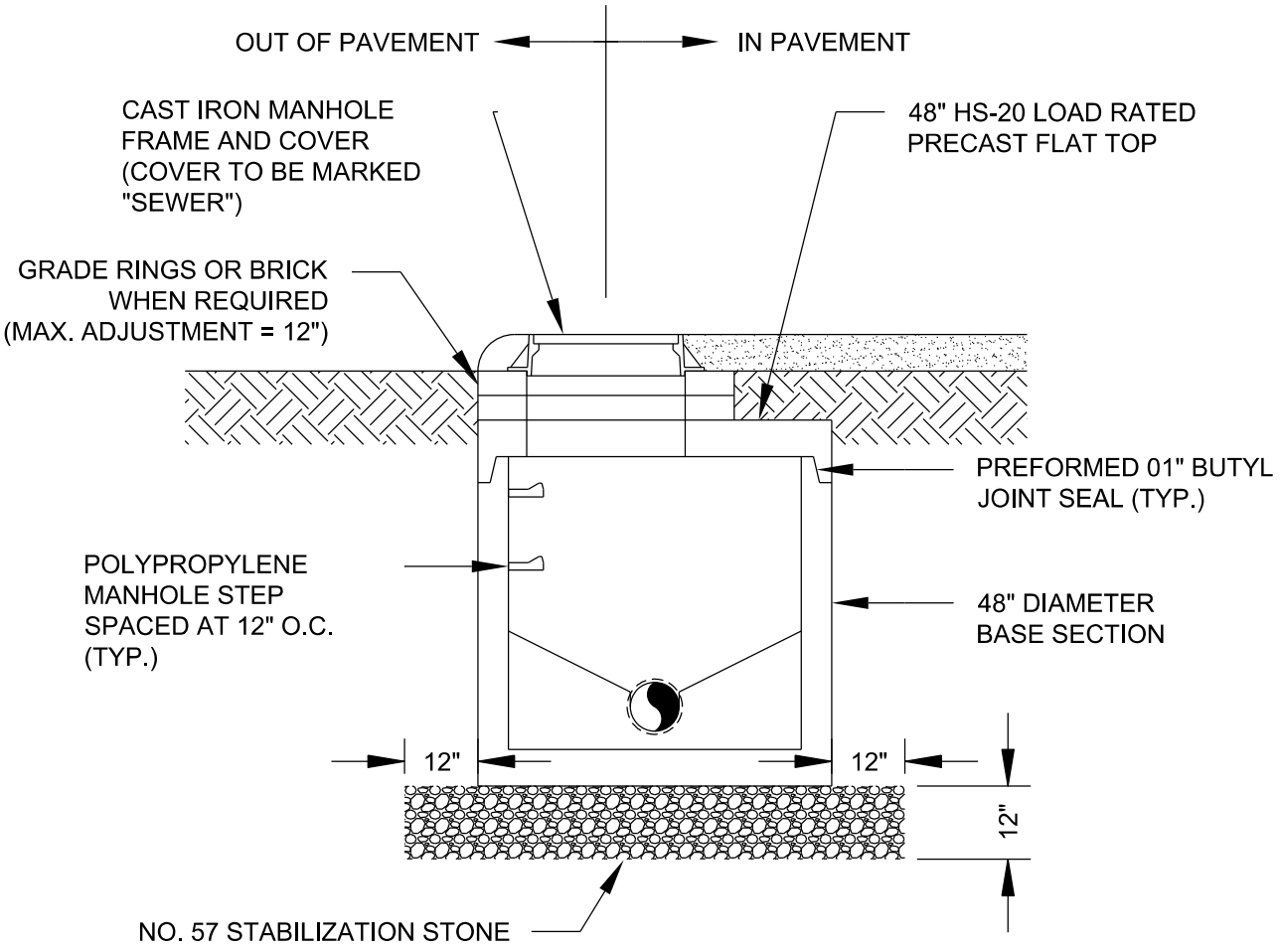

NOTES:

1. MANHOLES LOCATED OUTSIDE OF PAVEMENT SHALL HAVE WATER TIGHT BOLT-DOWN LIDS AND 2 FEET ABOVE FINISHED GRADE WITH FRAME CAST INTO THE CONE SECTION.

HENRY COUNTY WATER AUTHORITY

SHALLOW SANITARY SEWER MANHOLE

REVISED: 09/11/2018

SCALE: N.T.S.

DETAIL NO.

S10

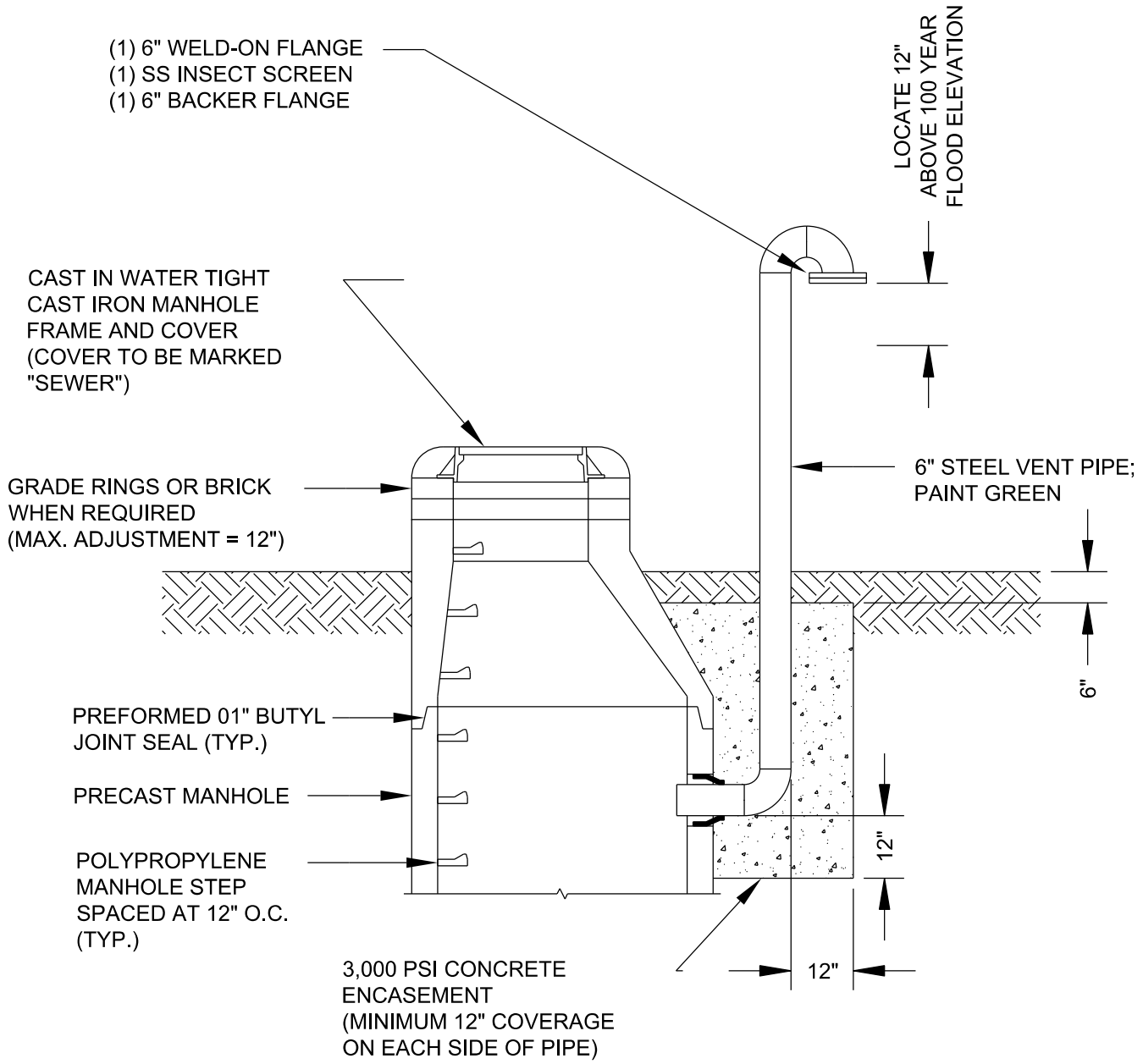

NOTES:

1. MANHOLES LOCATED OUTSIDE OF PAVEMENT SHALL HAVE WATER TIGHT BOLT-DOWN LIDS AND 2 FEET ABOVE FINISHED GRADE WITH FRAME CAST INTO THE CONE SECTION.

HENRY COUNTY WATER AUTHORITY

SANITARY SEWER MANHOLE VENT

REVISED: 09/11/2018

SCALE: N.T.S.

DETAIL NO.

S11

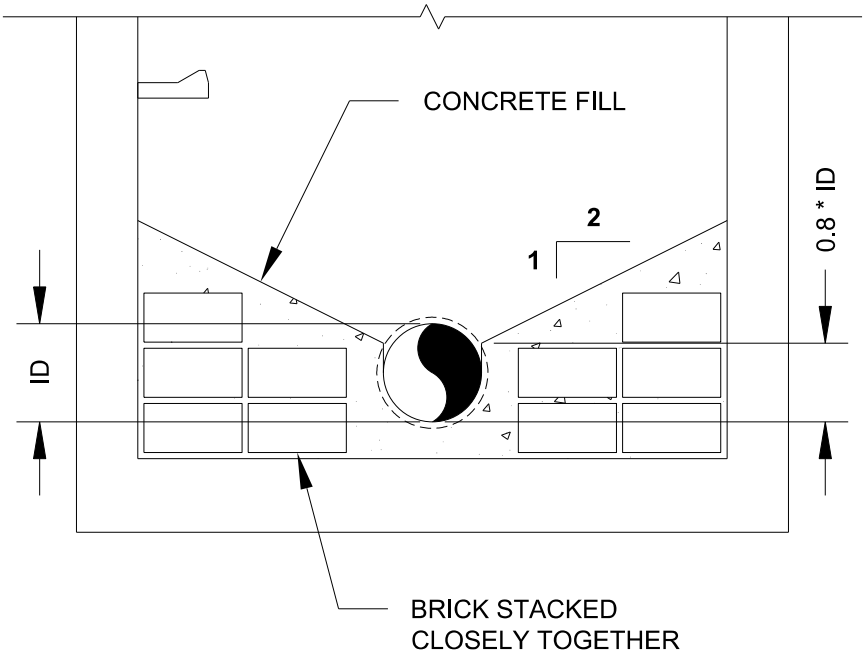

NOTES:

1. CONCRETE FILL SHALL BE 3 PARTS SAND TO 1 PART CEMENT.
2. BRICK SHALL BE COMMON SMOOTH RED BRICK.
3. PROVIDE A MINIMUM OF 2" OF COVER OVER BRICK.

HENRY COUNTY WATER AUTHORITY

STANDARD MANHOLE INVERT

REVISED: 01/01/2012

SCALE: N.T.S.

DETAIL NO.

S12

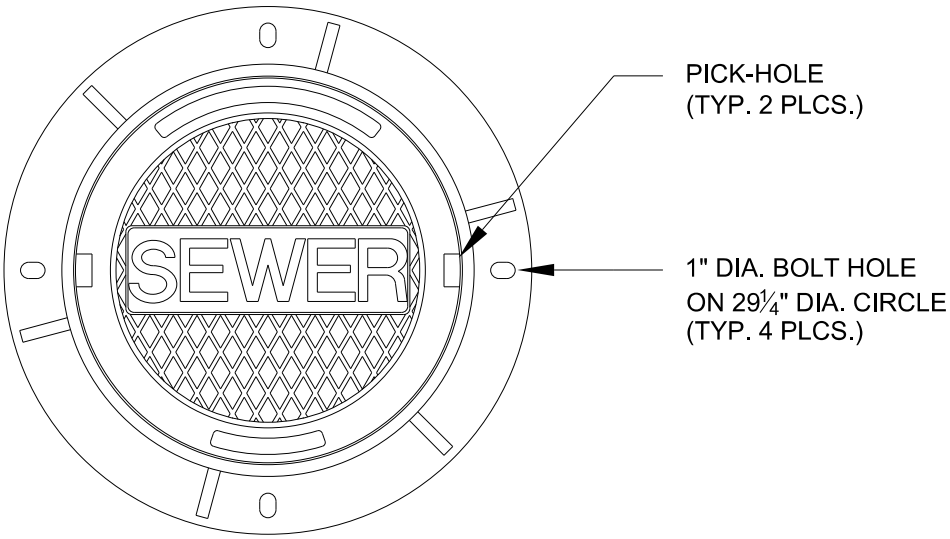

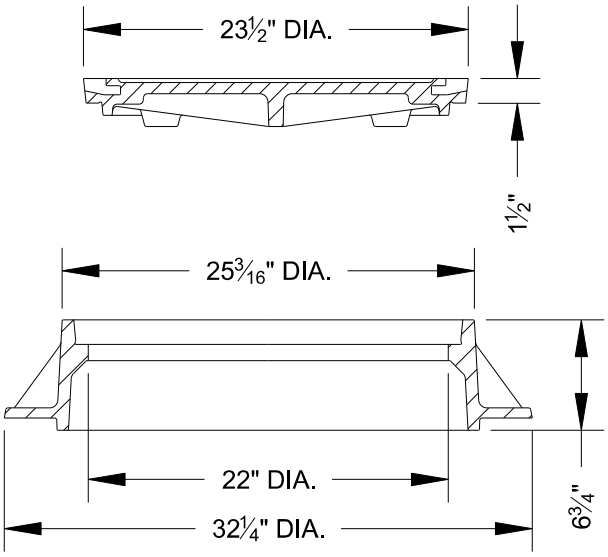

NOTES:

1. MANHOLE FRAME AND COVER SHALL BE HEAVY DUTY DUCTILE IRON CASTINGS.
2. BEARING SURFACES SHALL BE MACHINED.

HENRY COUNTY WATER AUTHORITY

STANDARD SANITARY SEWER MANHOLE LID

REVISED: 01/01/2012

SCALE: N.T.S.

DETAIL NO.

S13

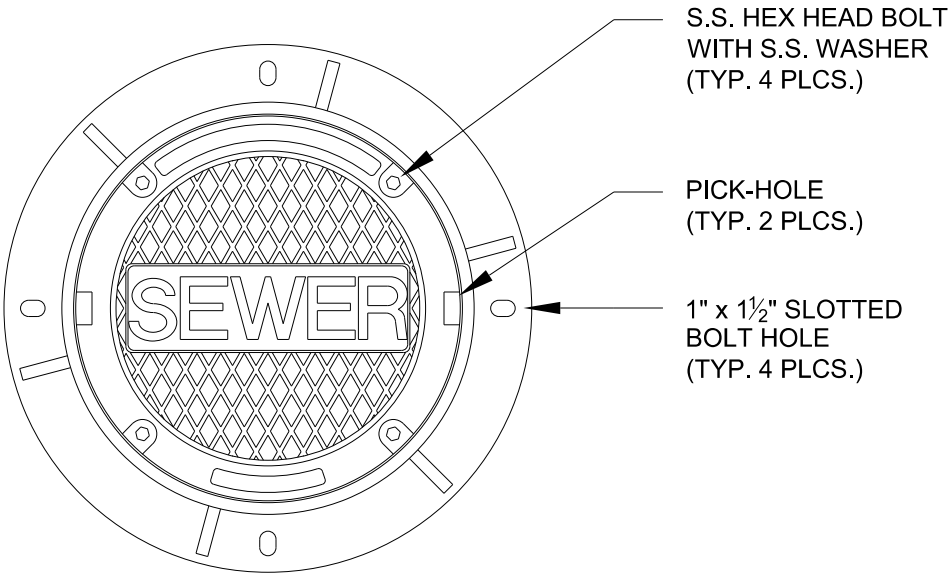

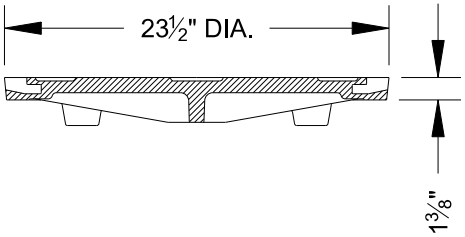

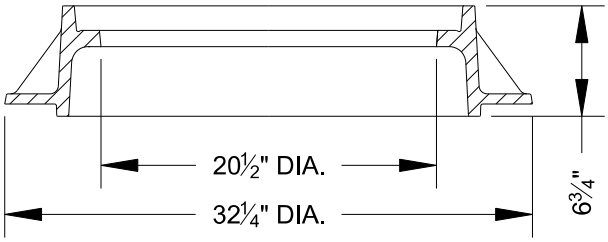

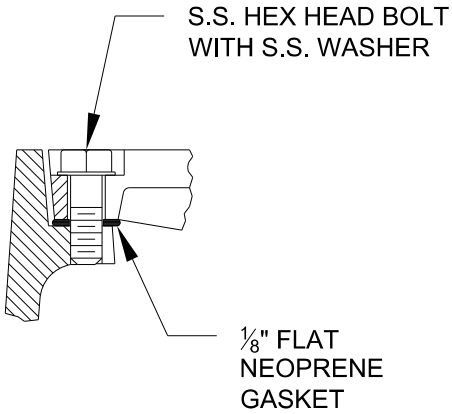

NOTES:

1. MANHOLE FRAME AND COVER SHALL BE HEAVY DUTY DUCTILE IRON CASTINGS.
2. BEARING SURFACES SHALL BE MACHINED.

HENRY COUNTY WATER AUTHORITY

WATERTIGHT SANITARY SEWER MANHOLE LID

REVISED: 01/01/2012

SCALE: N.T.S.

DETAIL NO.

S14

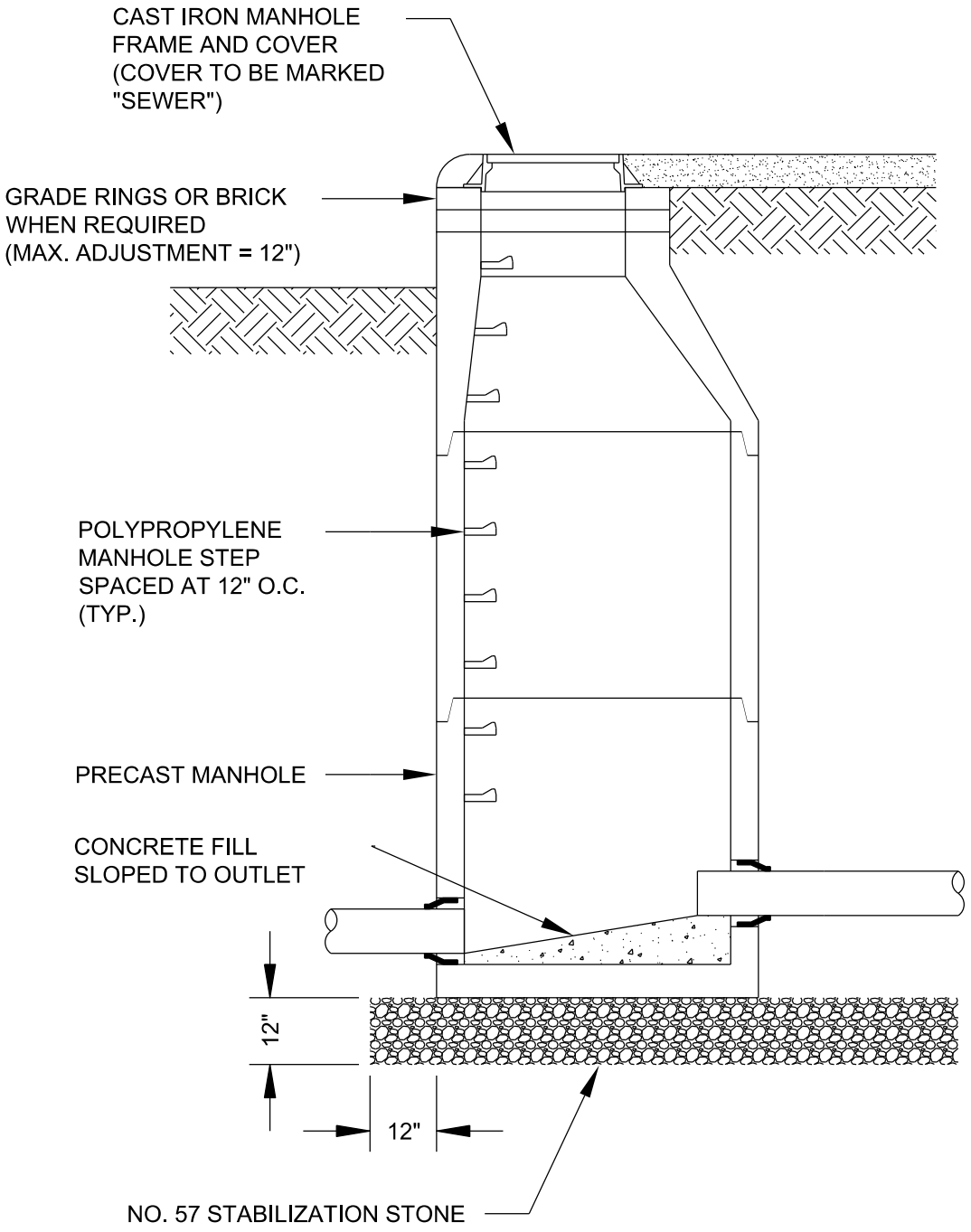

NOTES:

1. DISCHARGE MANHOLE SHALL BE LINED WITH A FIBERGLASS REINFORCED EPOXY RESIN LINING SYSTEM OR AN ELASTOMERIC POLYURETHANE LINING SYSTEM.

HENRY COUNTY WATER AUTHORITY

SANITARY FORCE MAIN DISCHARGE MANHOLE

REVISED: 03/16/2018

SCALE: N.T.S.

DETAIL NO.

S15

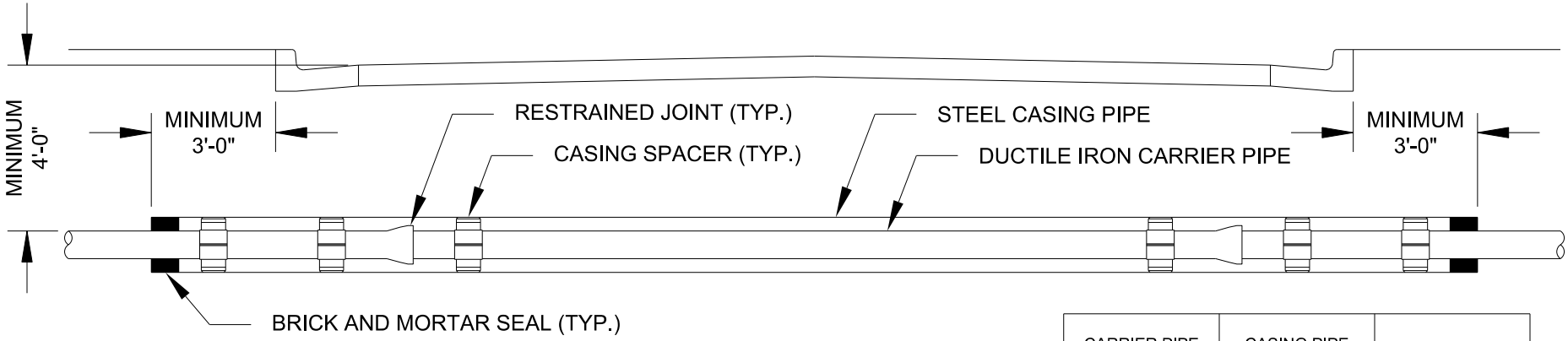

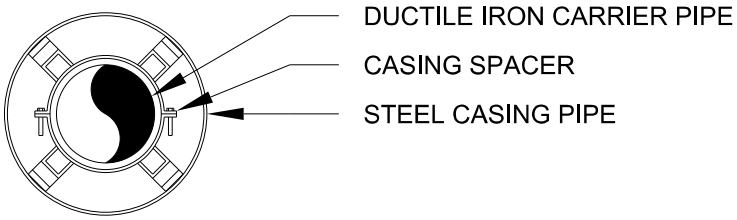

CARRIER PIPE NOMINAL DIAMETER (IN)	CASING PIPE NOMINAL DIAMETER (IN)	CASING PIPE THICKNESS (IN)
8	16	0.2500
10	18	0.2500
12	20	0.3130
16	26	0.3750
20	30	0.4380
24	36	0.5000
30	42	0.5000
36	48	0.5000

NOTES:

1. JOINTS INSIDE CASING PIPE SHALL BE RESTRAINED.
2. PROVIDE A MINIMUM OF 2 CASING SPACERS PER JOINT OF PIPE.
3. ENDS OF CASING PIPE SHALL BE SEALED WITH 8" BRICK AND CEMENT MORTAR.
4. ALL COUNTY ROAD CROSSINGS SHALL BE INSTALLED IN ACCORDANCE WITH HENRY COUNTY DOT STANDARDS AND PERMIT REQUIREMENTS.
5. ALL STATE HIGHWAY CROSSINGS SHALL BE INSTALLED IN ACCORDANCE WITH GEORGIA DOT STANDARDS AND PERMIT REQUIREMENTS.
6. ALL RAILROAD CROSSINGS SHALL BE INSTALLED IN ACCORDANCE WITH AMERICAN RAILWAY ENGINEERING ASSOCIATION REGULATIONS AND IN ACCORDANCE WITH PERMIT REQUIREMENTS.

HENRY COUNTY WATER AUTHORITY

TYPICAL JACK AND BORE DETAIL

REVISED: 01/01/2012

SCALE: N.T.S.

DETAIL NO.

S16

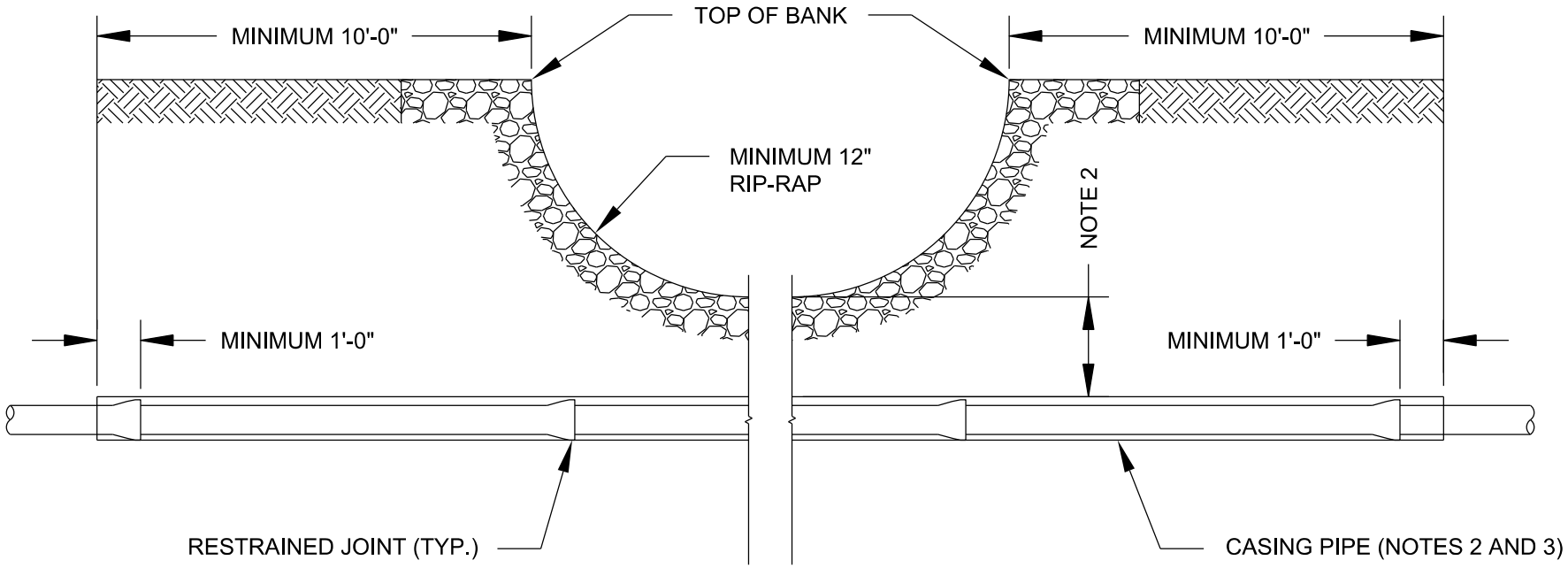

NOTES:

1. PIPE USED FOR CREEK CROSSINGS SHALL BE DUCTILE IRON PIPE UNLESS OTHERWISE APPROVED BY HCWA. AT LEAST ONE JOINT BEYOND THE END OF CASING SHALL BE RESTRAINED, OR AS REQUIRED BY HCWA.
2. MINIMUM DEPTH OF COVER SHALL BE 12 INCHES.
3. REFER TO DETAIL S16 FOR GRAVITY SEWER AND S38 FOR FORCE MAIN CASING DIAMETERS.
4. PLACE STONE RIP-RAP APPROXIMATELY 5 FEET UPSTREAM AND 5 FEET DOWNSTREAM FROM CENTERLINE OF PIPE ALONG CREEK BED.

HENRY COUNTY WATER AUTHORITY

CREEK CROSSING

REVISED: 09/11/2018

SCALE: N.T.S.

DETAIL NO.

S17

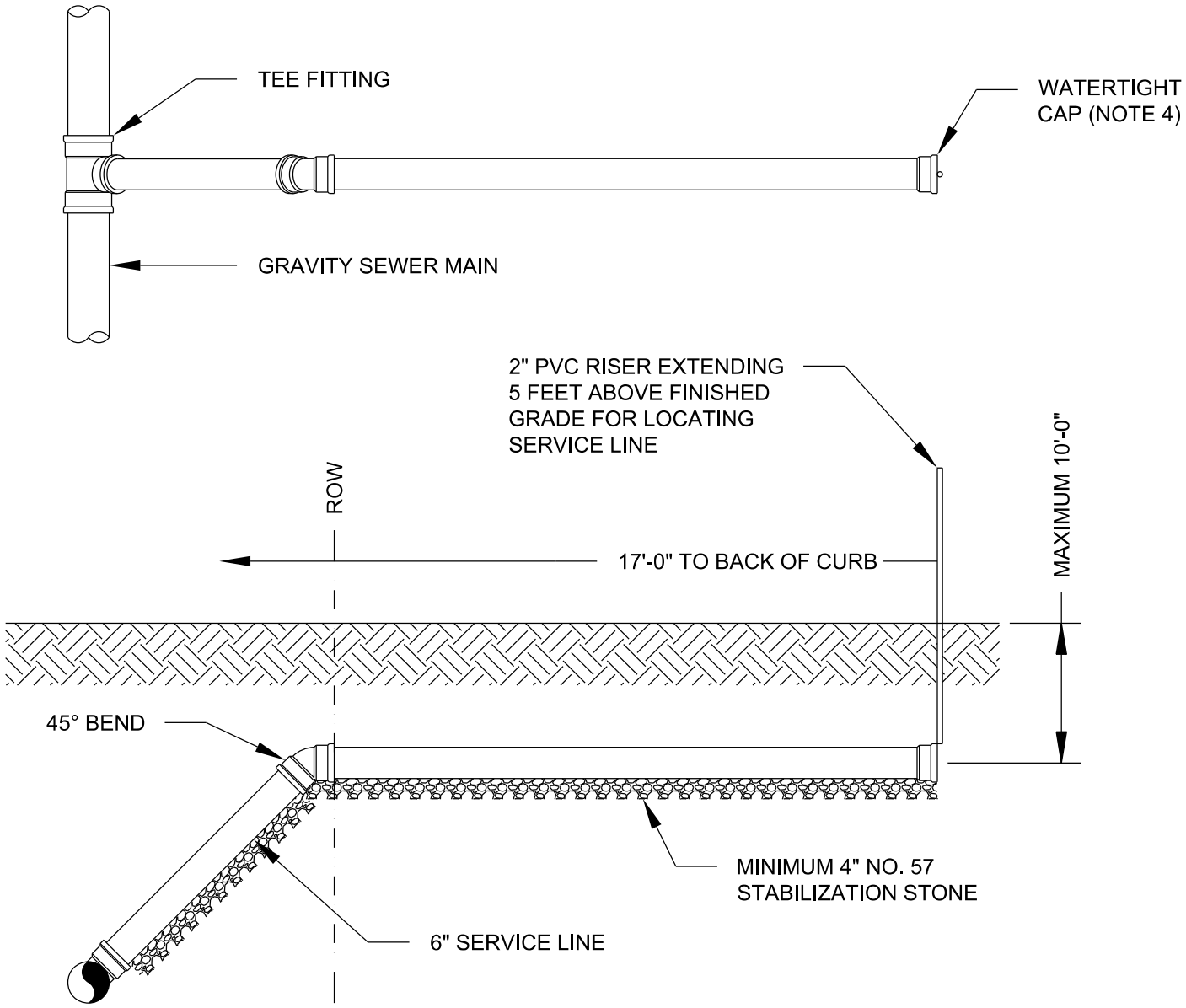

NOTES:

1. SERVICE LINES SHALL BE STUBBED OUT TO 17 FEET BEHIND THE BACK OF CURB AND SHALL BE NO MORE THAN 10 FEET DEEP.
2. A WATER TIGHT CAP SHALL BE INSTALLED ON THE END OF THE LINE.
3. SERVICE LINES HAVING LESS THAN 5 FEET OF COVER SHALL BE DUCTILE IRON PIPE.
4. PLUMBING CONTRACTOR SHALL TIE ON TO SERVICE LINE USING STANDARD PVC FITTINGS OR "DONUT" CONNECTION WITH GROUT.

HENRY COUNTY WATER AUTHORITY

SEWER SERVICE LINE LATERAL

REVISED: 09/19/2018

SCALE: N.T.S.

DETAIL NO.

S18

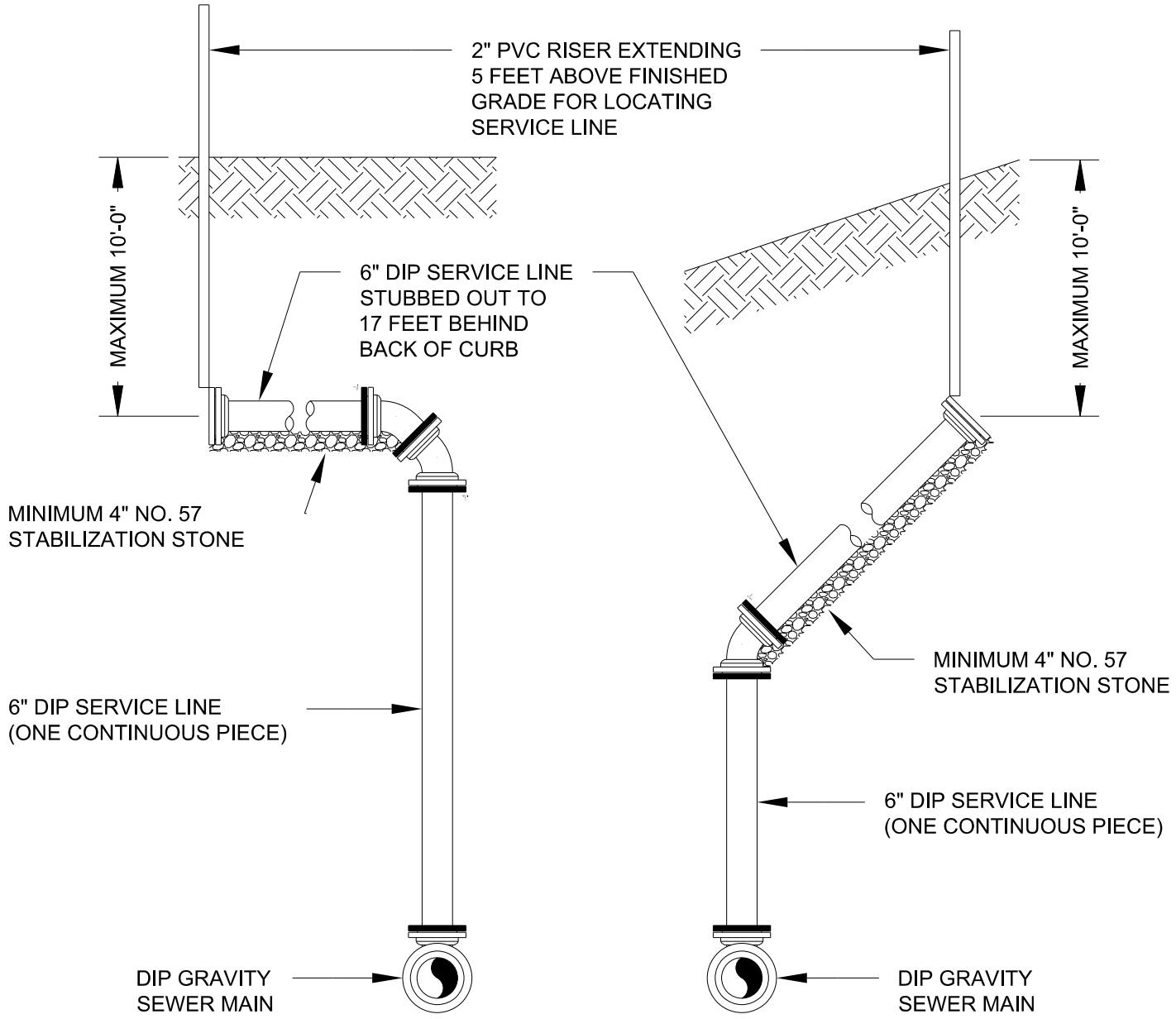

SHALLOW SLOPES

STEEP SLOPES

NOTES:

1. SERVICE LINES SHALL BE DUCTILE IRON PIPE STUBBED OUT TO 17 FEET BEHIND THE BACK OF CURB AND SHALL BE NO MORE THAN 10 FEET DEEP.
2. FITTINGS SHALL BE RESTRAINED.
3. SERVICE LINE SHALL BE PLUGGED WITH A WATERTIGHT CAP.

HENRY COUNTY WATER AUTHORITY

SERVICE LATERAL FOR SEWER LINES 16 FEET DEEP AND GREATER

REVISED: 01/01/2012

SCALE: N.T.S.

DETAIL NO.

S19

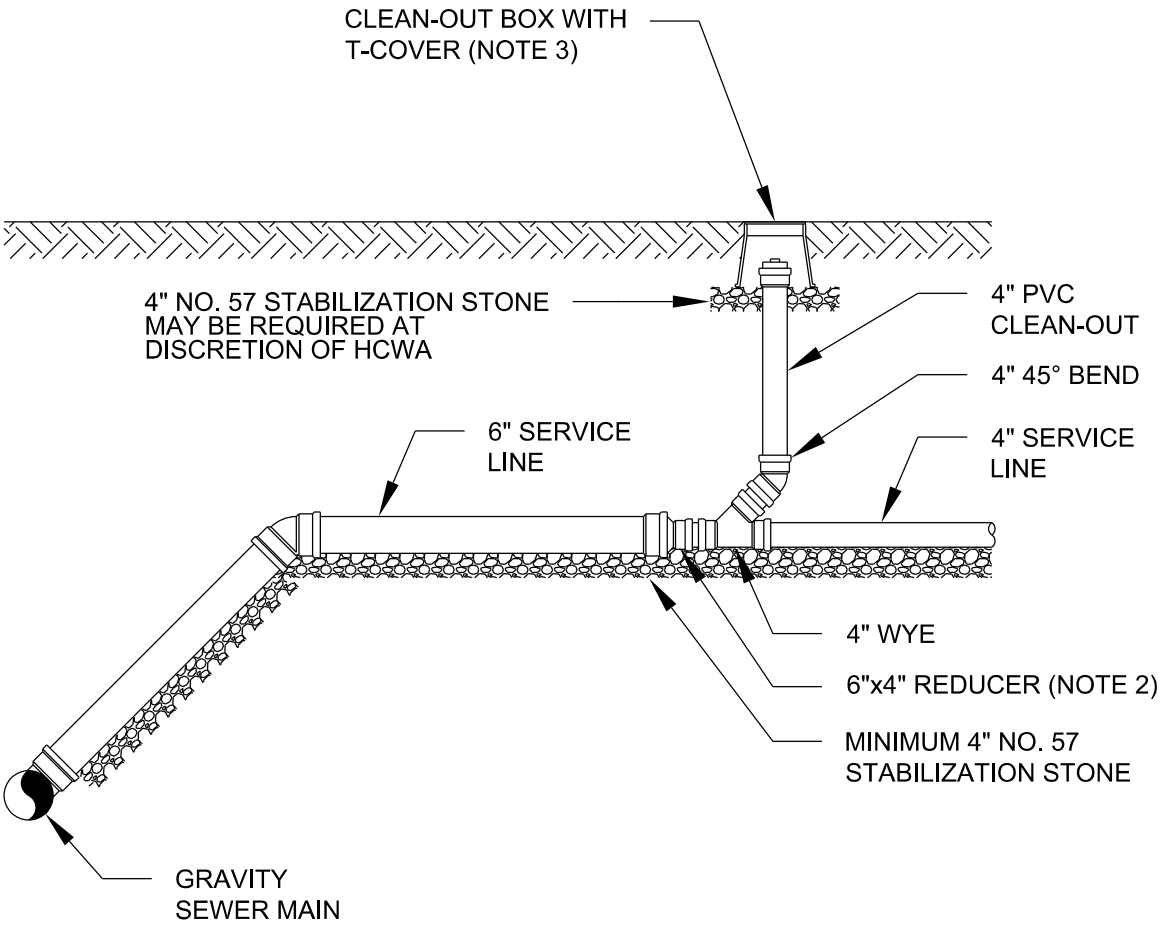

NOTES:

1. A SEWER TAP INSPECTION IS REQUIRED BY HCWA.
2. PLUMBING CONTRACTOR SHALL TIE ON TO SERVICE LINE USING STANDARD PVC FITTINGS OR "DONUT" CONNECTION.
3. CLEAN-OUT COVER SHALL HAVE "HCWA SEWER" EMBOSSED ON LID AND BE FLUSH WITH FINISHED GRADE.

HENRY COUNTY WATER AUTHORITY

SANITARY SEWER SERVICE LINE CLEAN-OUT CONNECTION

REVISED: 02/16/2018

SCALE: N.T.S.

DETAIL NO.

S20

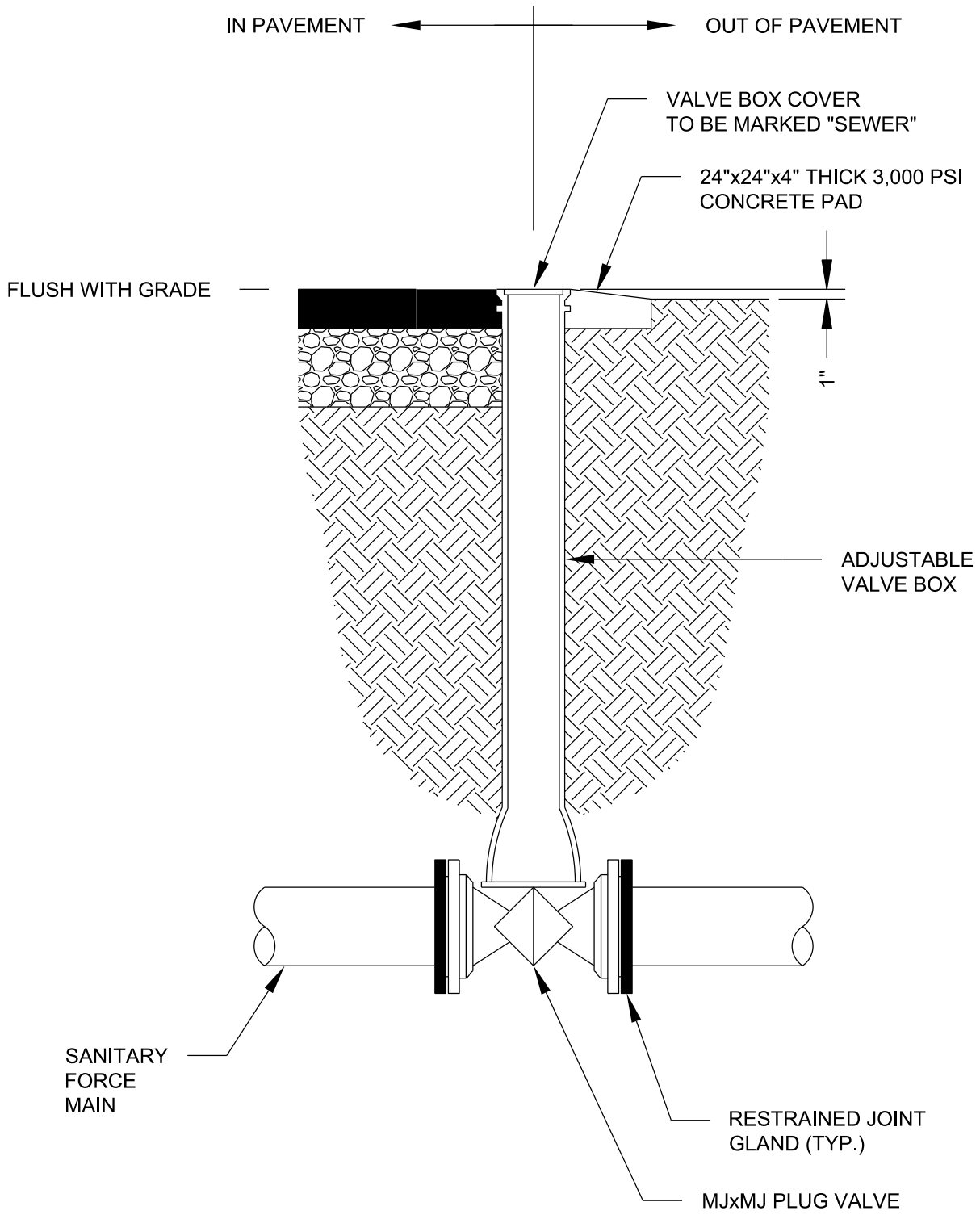

HENRY COUNTY WATER AUTHORITY

SANITARY SEWAGE FORCE MAIN ISOLATION VALVE

REVISED: 09/11/2018

SCALE: N.T.S.

DETAIL NO.

S21

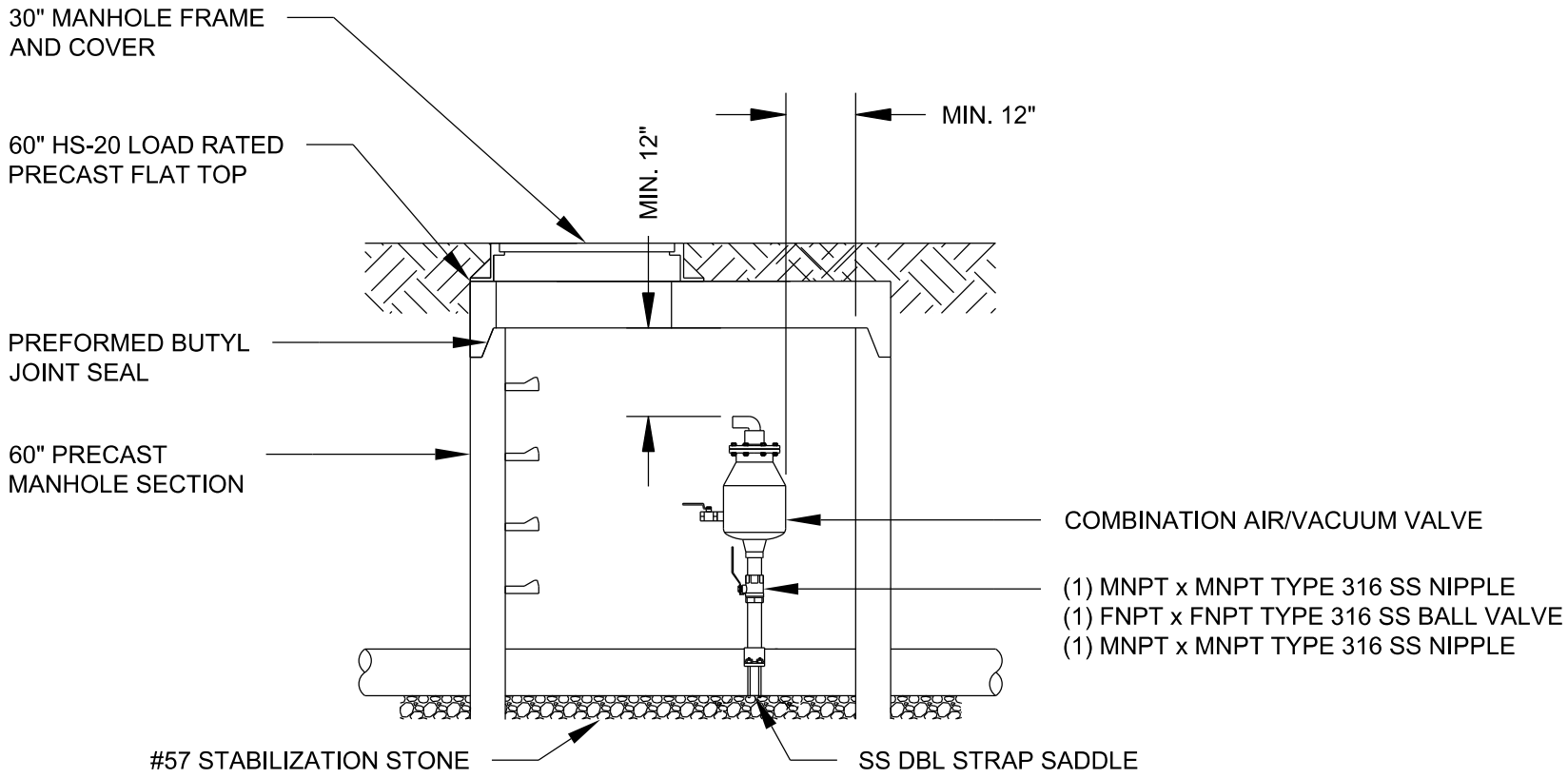

HENRY COUNTY WATER AUTHORITY

SANITARY SEWAGE COMBINATION AIR/VACUUM VALVE (3" AND SMALLER)

REVISED: 02/16/2018

SCALE: N.T.S.

DETAIL NO.

S22

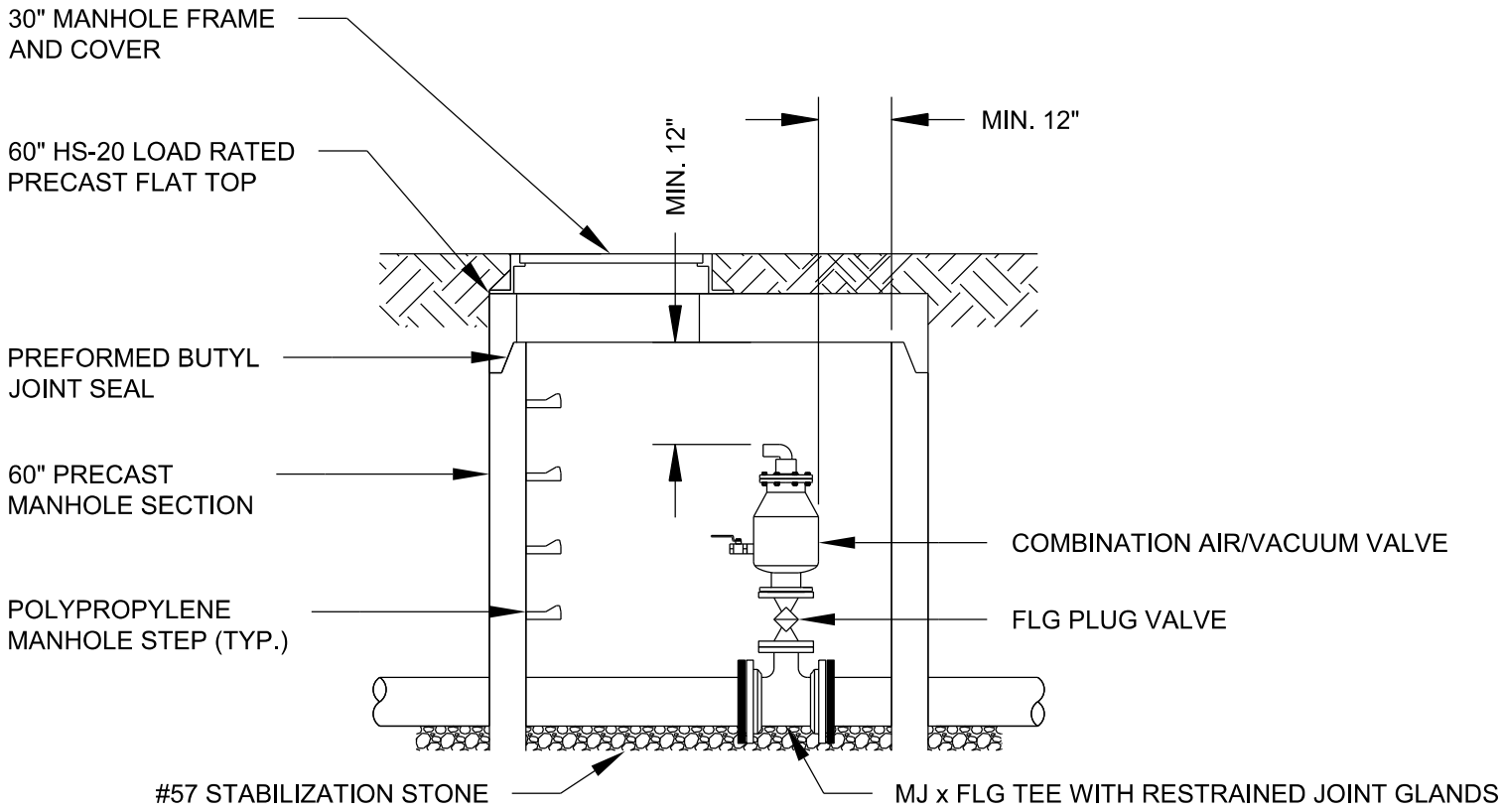

HENRY COUNTY WATER AUTHORITY

SANITARY SEWAGE COMBINATION AIR/VACUUM VALVE (4" AND LARGER)

REVISED: 02/16/2018

SCALE: N.T.S.

DETAIL NO.

S23

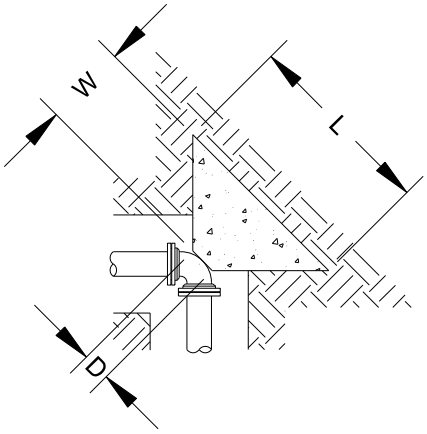

BEND PLAN

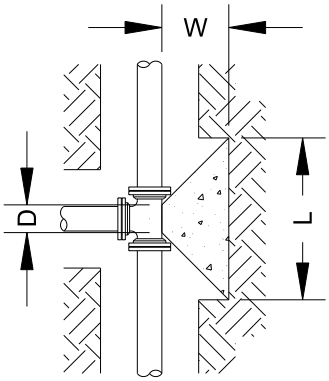

TEE PLAN

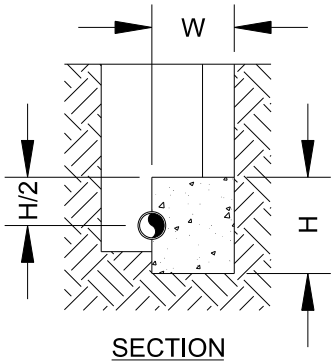

SECTION

TEES						
PIPE DIA. (IN)	D DIM.	L DIM.	H DIM.	W DIM.	CONC. VOLUME (YD^3)	THRUST (LBF)
4	0'-6"	2'-4"	1'-2"	0'-11"	0.06	4,072
6	0'-8"	3'-4"	1'-8"	1'-4"	0.16	8,413
8	0'-9"	4'-5"	2'-3"	1'-10"	0.39	14,473
10	0'-11"	5'-5"	2'-9"	2'-3"	0.73	21,773
12	1'-1"	6'-5"	3'-3"	2'-8"	1.20	30,791
90° BENDS						
PIPE DIA. (IN)	D DIM.	L DIM.	H DIM.	W DIM.	CONC. VOLUME (YD^3)	THRUST (LBF)
4	0'-5"	2'-9"	1'-5"	1'-2"	0.10	5,758
6	0'-8"	4'-0"	2'-0"	1'-8"	0.29	11,898
8	0'-9"	5'-3"	2'-8"	2'-3"	0.67	20,468
10	0'-11"	6'-5"	3'-3"	2'-9"	1.21	30,792
12	1'-1"	8'-7"	3'-10"	3'-3"	2.00	43,545
45° BENDS						
PIPE DIA. (IN)	D DIM.	L DIM.	H DIM.	W DIM.	CONC. VOLUME (YD^3)	THRUST (LBF)
4	0'-4"	2'-0"	1'-0"	0'-10"	0.04	3,116
6	0'-7"	2'-11"	1'-6"	1'-2"	0.11	6,439
8	0'-8"	3'-10"	1'-11"	1'-7"	0.25	11,077
10	0'-11"	4'-9"	2'-5"	1'-11"	0.49	16,664
12	1'-1"	6'-7"	2'-10"	2'-3"	0.79	23,566
22½° BENDS						
PIPE DIA. (IN)	D DIM.	L DIM.	H DIM.	W DIM.	CONC. VOLUME (YD^3)	THRUST (LBF)
4	0'-5"	1'-5"	0'-9"	0'-6"	0.01	1,589
6	0'-7"	2'-1"	1'-1"	0'-9"	0.04	3,283
8	0'-9"	2'-9"	1'-5"	1'-0"	0.09	5,647
10	0'-10"	3'-4"	1'-8"	1'-3"	0.16	8,495
12	1'-0"	4'-0"	2'-0"	1'-6"	0.28	12,014

NOTES:

1. THRUST BLOCK DIMENSIONS ARE BASED ON THE FOLLOWING DESIGN CRITERIA.

   WORKING PRESSURE = 150 PSI
   SOIL BEARING CAPACITY = 1,500 PSF
   SAFETY FACTOR = 1.5

   THESE ARE THE MINIMUM DESIGN CRITERIA. IF ACTUAL WORKING PRESSURE IS GREATER THAN 150 PSI OR IF ACTUAL SOIL BEARING CAPACITY IS LESS THAN 1,500 PSF, DIMENSIONS SHALL BE RECALCULATED.

2. THRUST BLOCK CONCRETE SHALL HAVE A MINIMUM 28 DAY COMPRESSIVE STRENGTH OF 2,500 PSI.
3. THRUST BLOCK SHALL BEAR AGAINST UNDISTURBED SOIL.
4. A MINIMUM 10 MIL PLASTIC SHEET SHALL BE PLACED BETWEEN CONCRETE AND PIPE.
5. ALL BOLTS SHALL REMAIN ACCESSIBLE. DO NOT COVER WITH CONCRETE.

HENRY COUNTY WATER AUTHORITY

CONCRETE THRUST BLOCK

REVISED: 01/01/2012

SCALE: N.T.S.

DETAIL NO.

S24

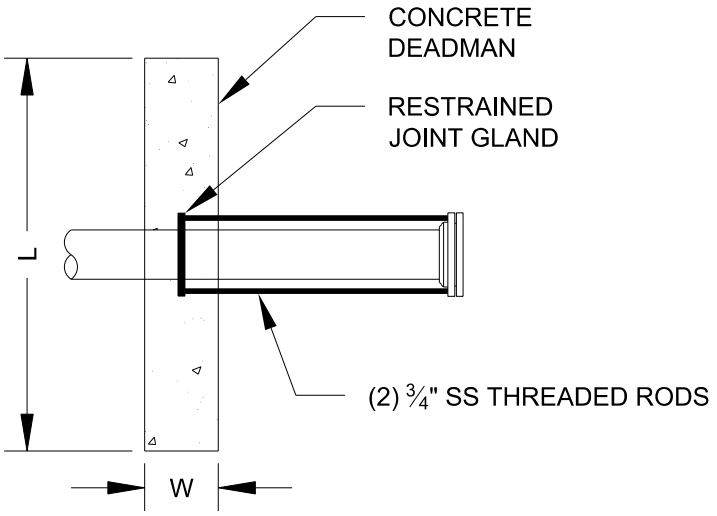

PLAN

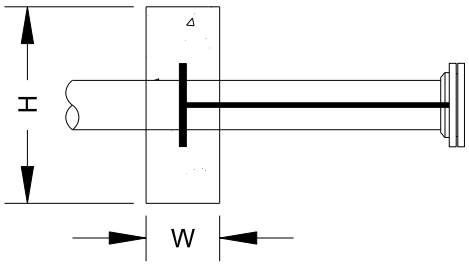

SECTION

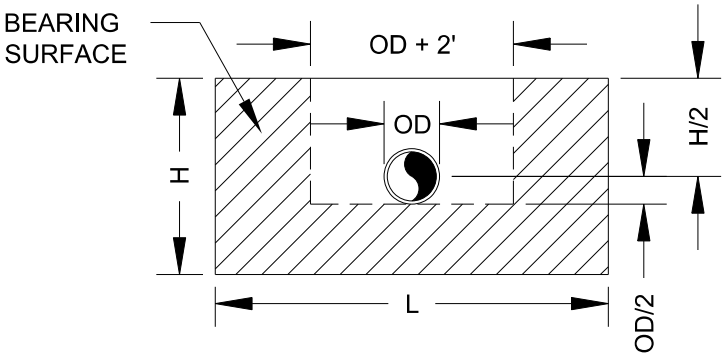

DEADMAN DIMENSION					
PIPE DIA. (IN)	L DIM.	H DIM.	W DIM.	CONC. VOLUME (YD^3)	THRUST (LBF)
4	3'-0"	1'-7"	1'-0"	0.18	4,072
6	4'-3"	2'-1"	1'-0"	0.33	8,413
8	5'-4"	2'-8"	1'-0"	0.53	14,473
10	6'-0"	3'-6"	1'-0"	0.78	21,773
12	7'-1"	4'-0"	1'-0"	1.05	30,791

NOTES:

1. DEADMAN DIMENSIONS ARE BASED ON THE FOLLOWING DESIGN CRITERIA.

   WORKING PRESSURE = 150 PSI
   SOIL BEARING CAPACITY = 1,500 PSF
   SAFETY FACTOR = 1.5

   THESE ARE THE MINIMUM DESIGN CRITERIA. IF ACTUAL WORKING PRESSURE IS GREATER THAN 150 PSI OR IF ACTUAL SOIL BEARING CAPACITY IS LESS THAN 1,500 PSF, DIMENSIONS SHALL BE RECALCULATED.

2. DEADMAN CONCRETE SHALL HAVE A MINIMUM 28 DAY COMPRESSIVE STRENGTH OF 2,500 PSI.
3. DEADMAN SHALL BEAR AGAINST UNDISTURBED SOIL.
4. A MINIMUM 10 MIL PLASTIC SHEET SHALL BE PLACED BETWEEN CONCRETE AND PIPE.
5. ALL BOLTS SHALL REMAIN ACCESSIBLE. DO NOT COVER WITH CONCRETE.

HENRY COUNTY WATER AUTHORITY

CONCRETE DEADMAN

REVISED: 01/01/2012

SCALE: N.T.S.

DETAIL NO.

S25

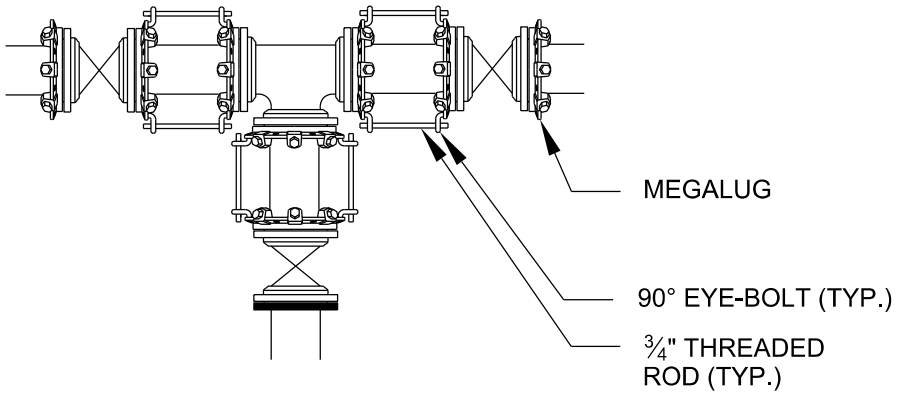

FITTING WITH TIE-RODS AND RESTRAINED JOINT GLANDS

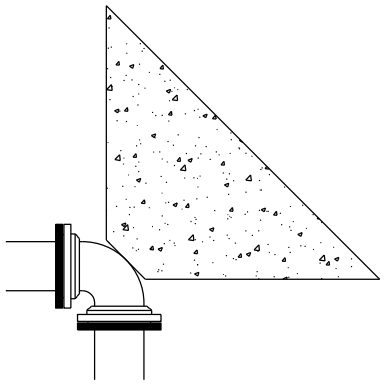

FITTING WITH RESTRAINED JOINT GLAND AND THRUST BLOCK

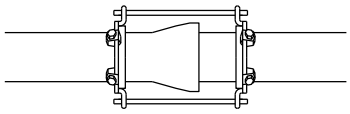

TIE-RODS FROM RESTRAINED JOINT GLAND TO RESTRAINED JOINT GLAND

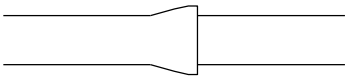

PUSH-ON JOINT WITH RESTRAINED JOINT GASKET

PIPE DIA. (IN)	ROD SIZE (IN)	# OF RODS
6	¾"	2
8	¾"	4
10	¾"	4
12	¾"	4
14	¾"	4
16	¾"	6

TIE-ROD CHART

NOTES:

1. RESTRAINED JOINT LENGTHS SHALL BE CALCULATED BY THE DESIGN ENGINEER. CALCULATIONS SHALL BE SUBMITTED TO HCWA.
2. THREADED ROD SHALL HAVE A MINIMUM YIELD STRENGTH OF 50,000 PSI.

HENRY COUNTY WATER AUTHORITY

THRUST RESTRAINT

REVISED: 02/21/2018

SCALE: N.T.S.

DETAIL NO.

S26

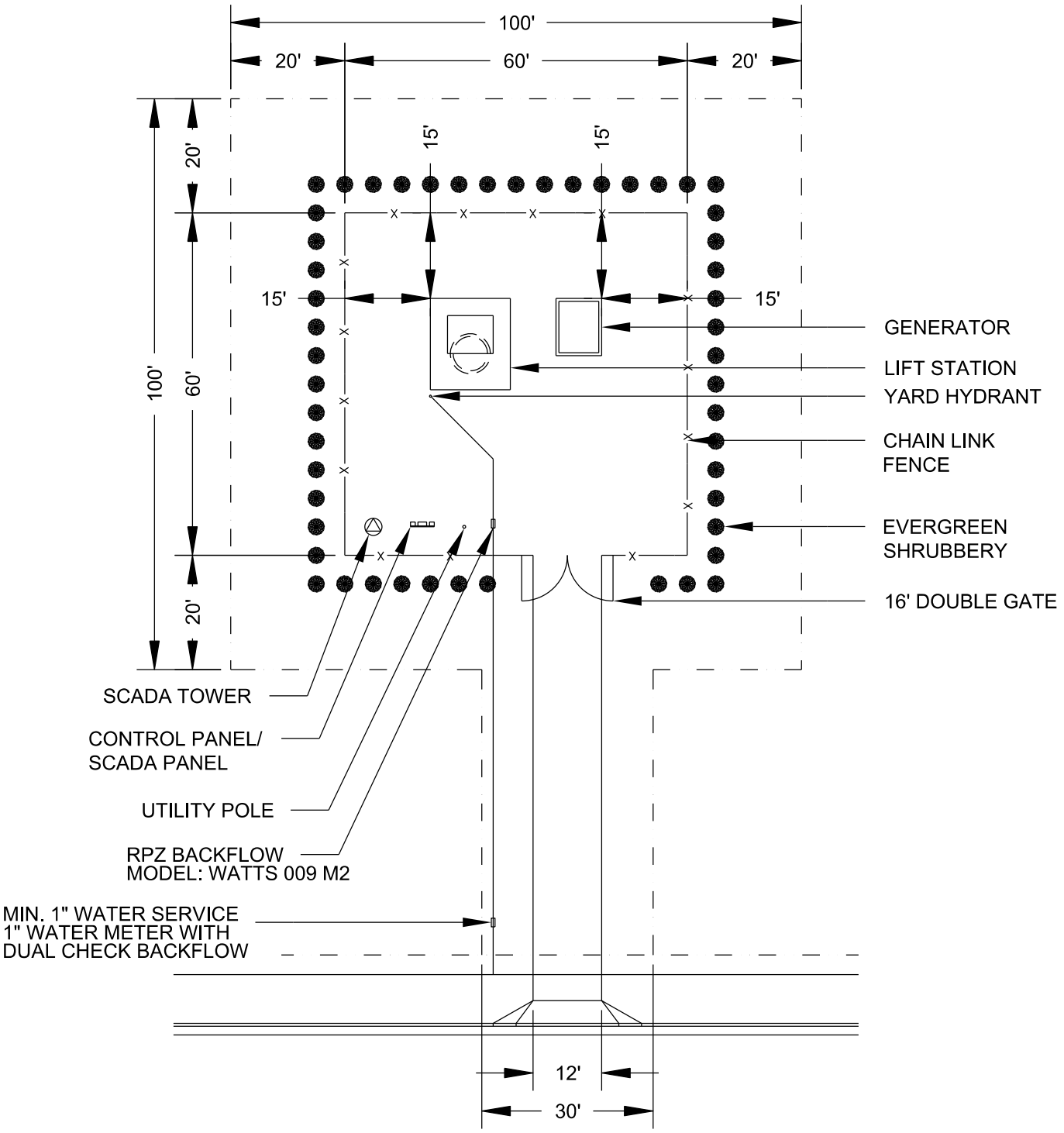

HENRY COUNTY WATER AUTHORITY

TYPICAL SANITARY SEWAGE LIFT STATION PROPERTY LAYOUT

REVISED: 03/16/2018

SCALE: N.T.S.

DETAIL NO.

S27

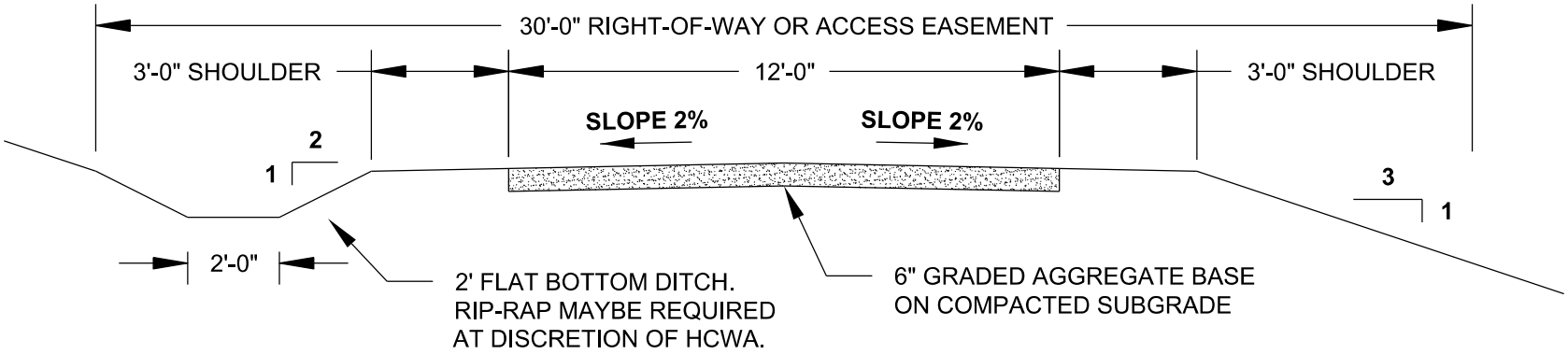

HENRY COUNTY WATER AUTHORITY

ACCESS ROAD

REVISED: 03/16/2018

SCALE: N.T.S.

DETAIL NO.

S28

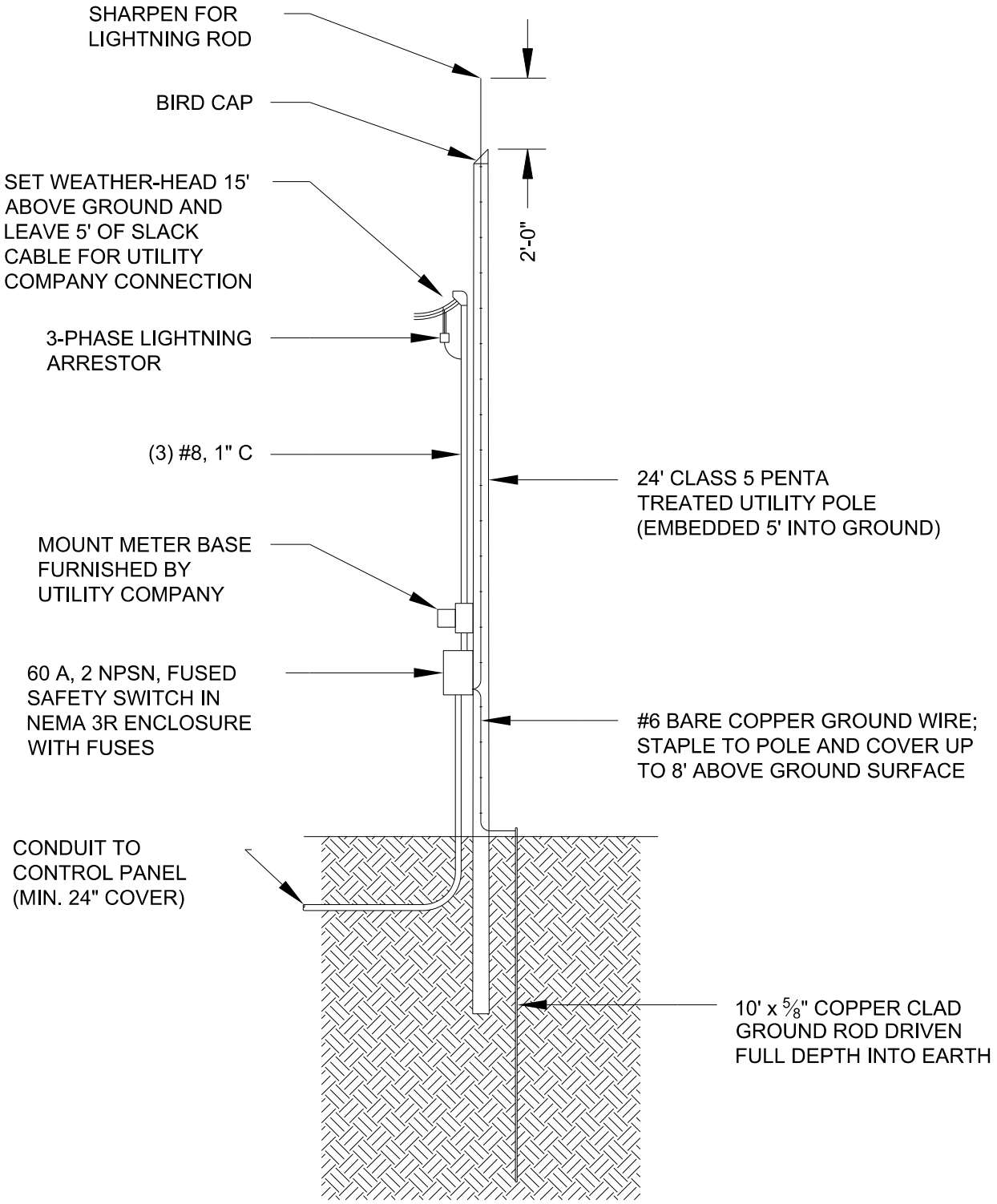

NOTES:

1. POWER COMPANY TO PROVIDE 120/240/480 V, 3-PHASE SERVICE TO WEATHER HEAD.

HENRY COUNTY WATER AUTHORITY

LIFT STATION ELECTRICAL CONNECTION

REVISED: 01/01/2012

SCALE: N.T.S.

DETAIL NO.

S29

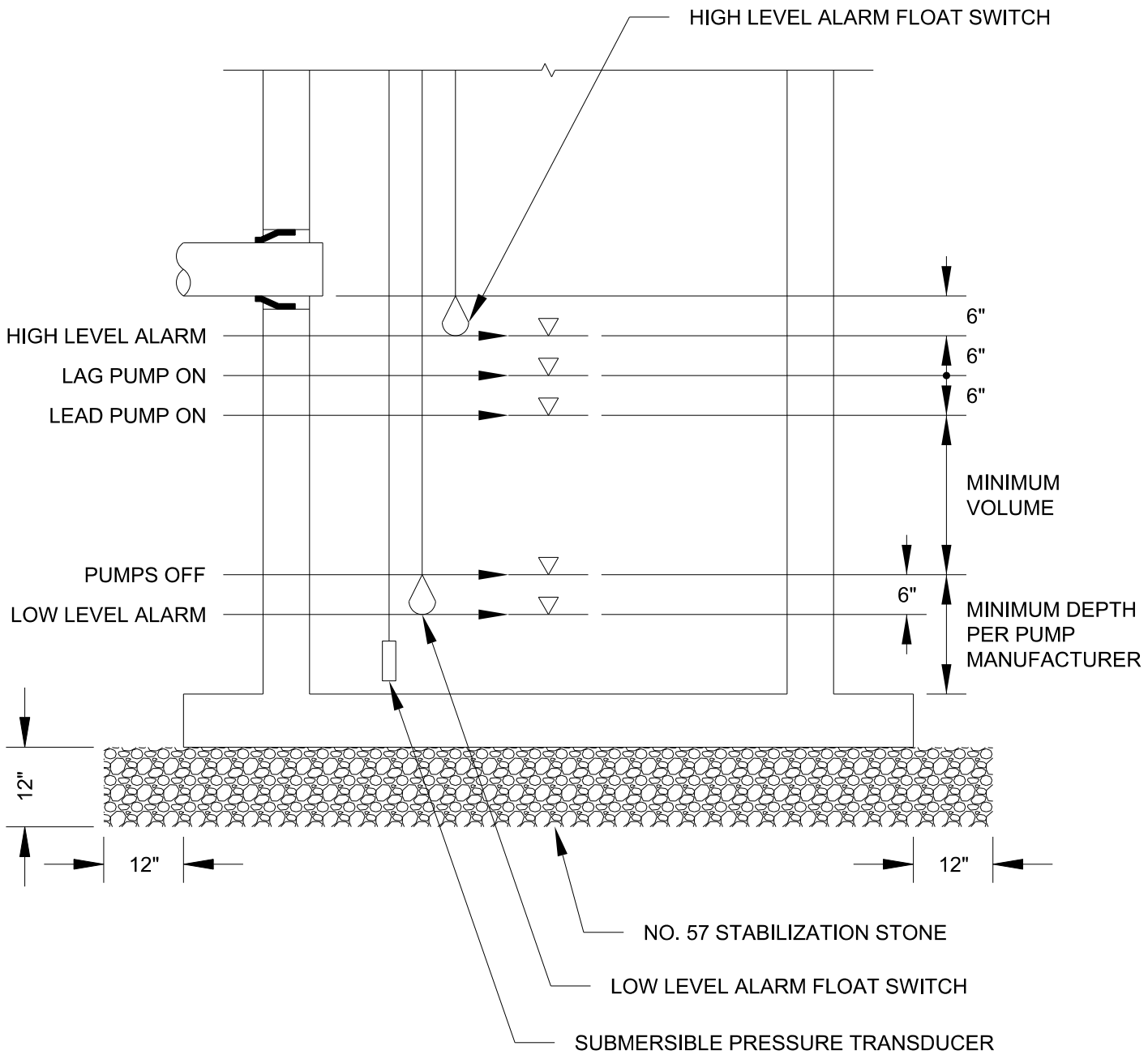

NOTES:

1. MINIMUM WET WELL DIMENSION IS 6' DIAMETER OR 6' x 6' SQUARE.
2. MINIMUM VOLUME SHALL BE CALCULATED BASED ON A MINIMUM PUMP CYCLE TIME OF 10 MINUTES (6 STARTS PER HOUR) FOR THE SINGLE LARGEST PUMP. A LONGER PUMP CYCLE TIME SHALL BE USED IF REQUIRED BY THE PUMP MANUFACTURER.

HENRY COUNTY WATER AUTHORITY

TYPICAL SANITARY SEWAGE LIFT STATION WET WELL

REVISED: 01/01/2012

SCALE: N.T.S.

DETAIL NO.

S30

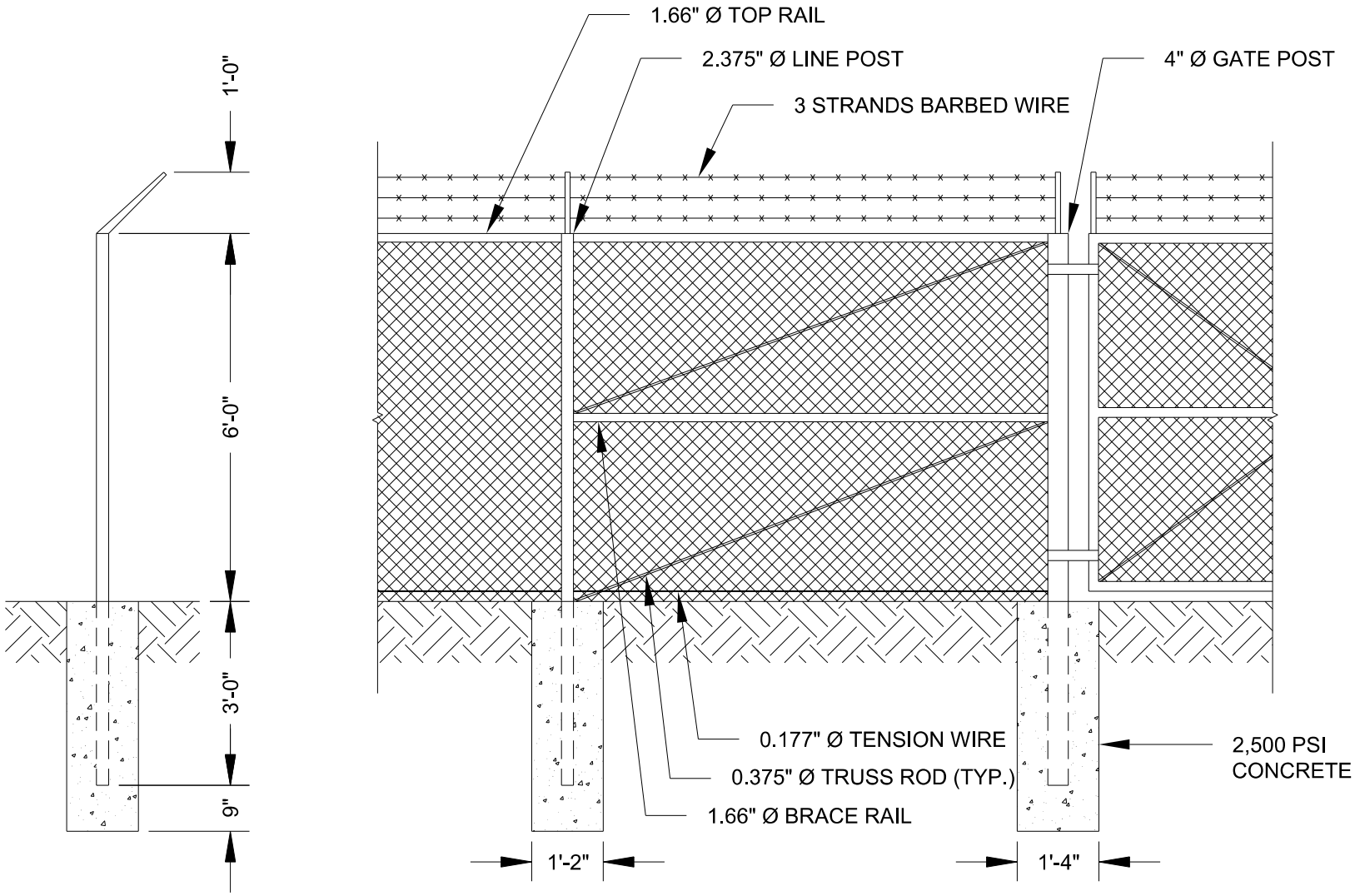

HENRY COUNTY WATER AUTHORITY

CHAIN LINK FENCE

REVISED: 01/01/2012

SCALE: N.T.S.

DETAIL NO.

S31

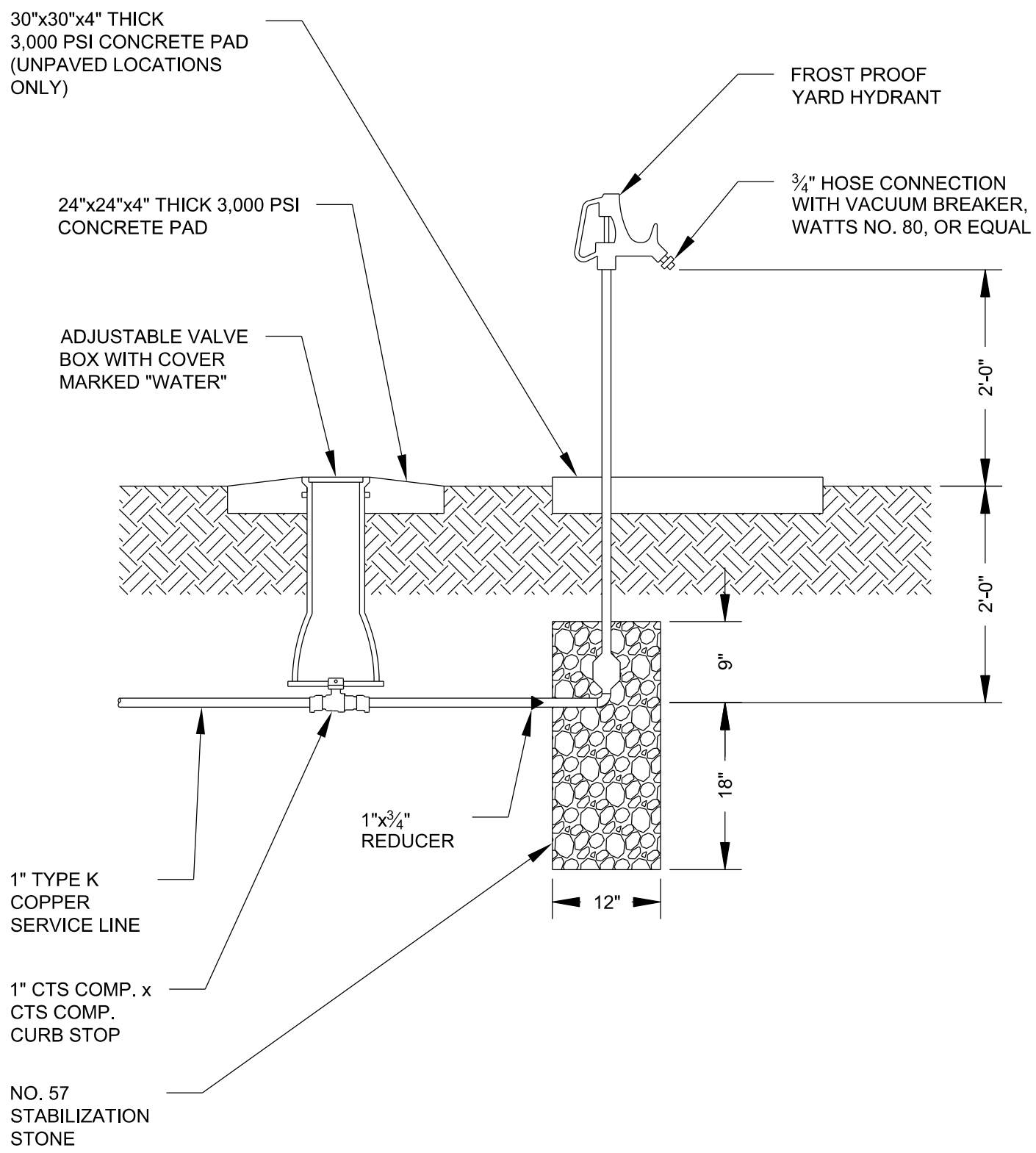

HENRY COUNTY WATER AUTHORITY

FROST PROOF YARD HYDRANT

REVISED: 02/16/2018

SCALE: N.T.S.

DETAIL NO.

S32

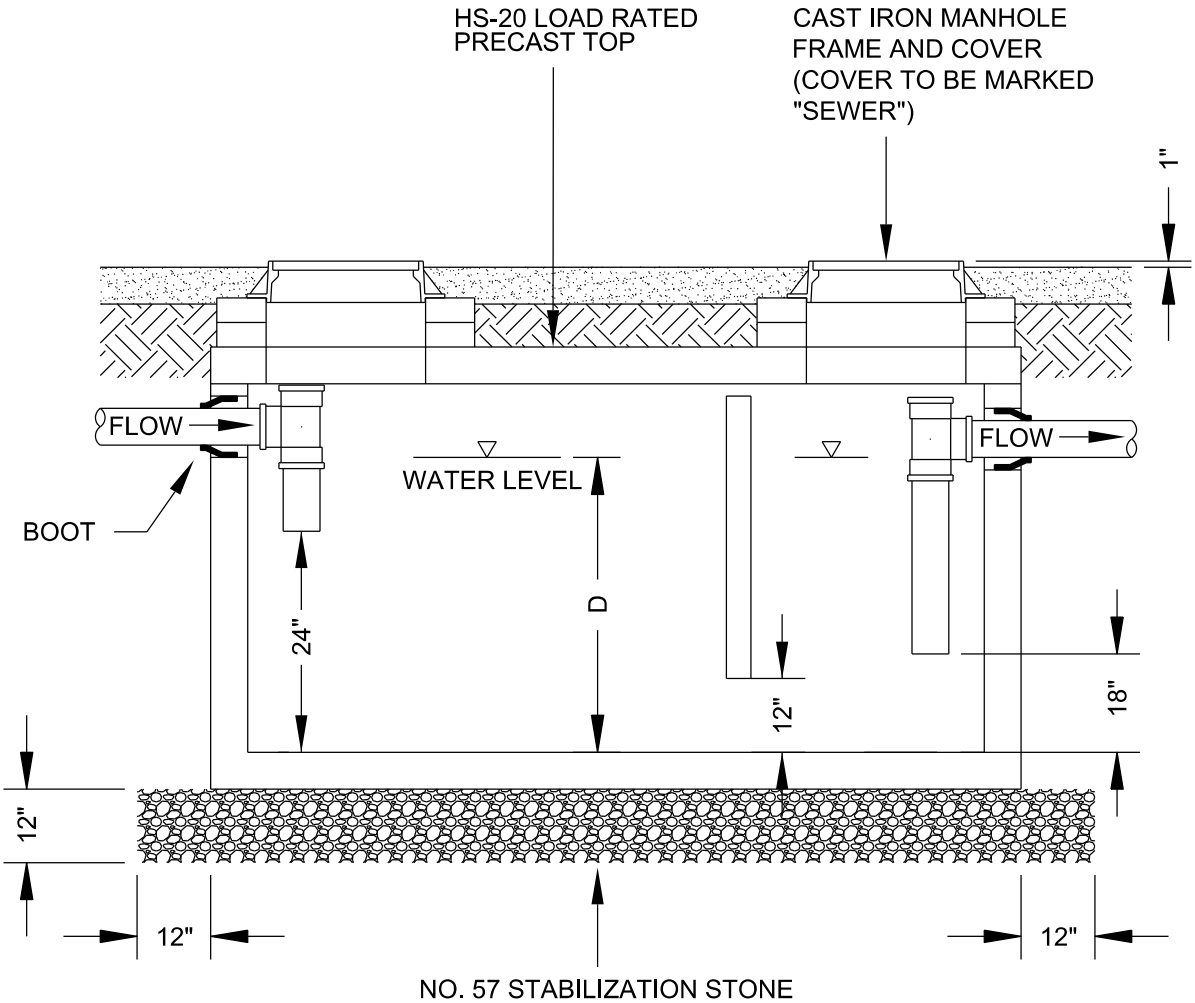

NOTES:

1. GREASE INTERCEPTOR SHALL HAVE A MINIMUM CAPACITY OF 1,500 GALLONS AND A MAXIMUM CAPACITY OF 3,000 GALLONS. IF REQUIRED CAPACITY IS GREATER THAN 3,000 GALLONS, MULTIPLE GREASE INTERCEPTORS SHALL BE USED.

2. CONCRETE DESIGN STRENGTH SHALL BE 4,000 PSI @ 28 DAYS.

3. GREASE INTERCEPTOR SHALL BE HS-20 LOAD RATED.

HENRY COUNTY WATER AUTHORITY		
GREASE INTERCEPTOR	REVISED: 02/16/2018	
	SCALE: N.T.S.	
	DETAIL NO. S33	

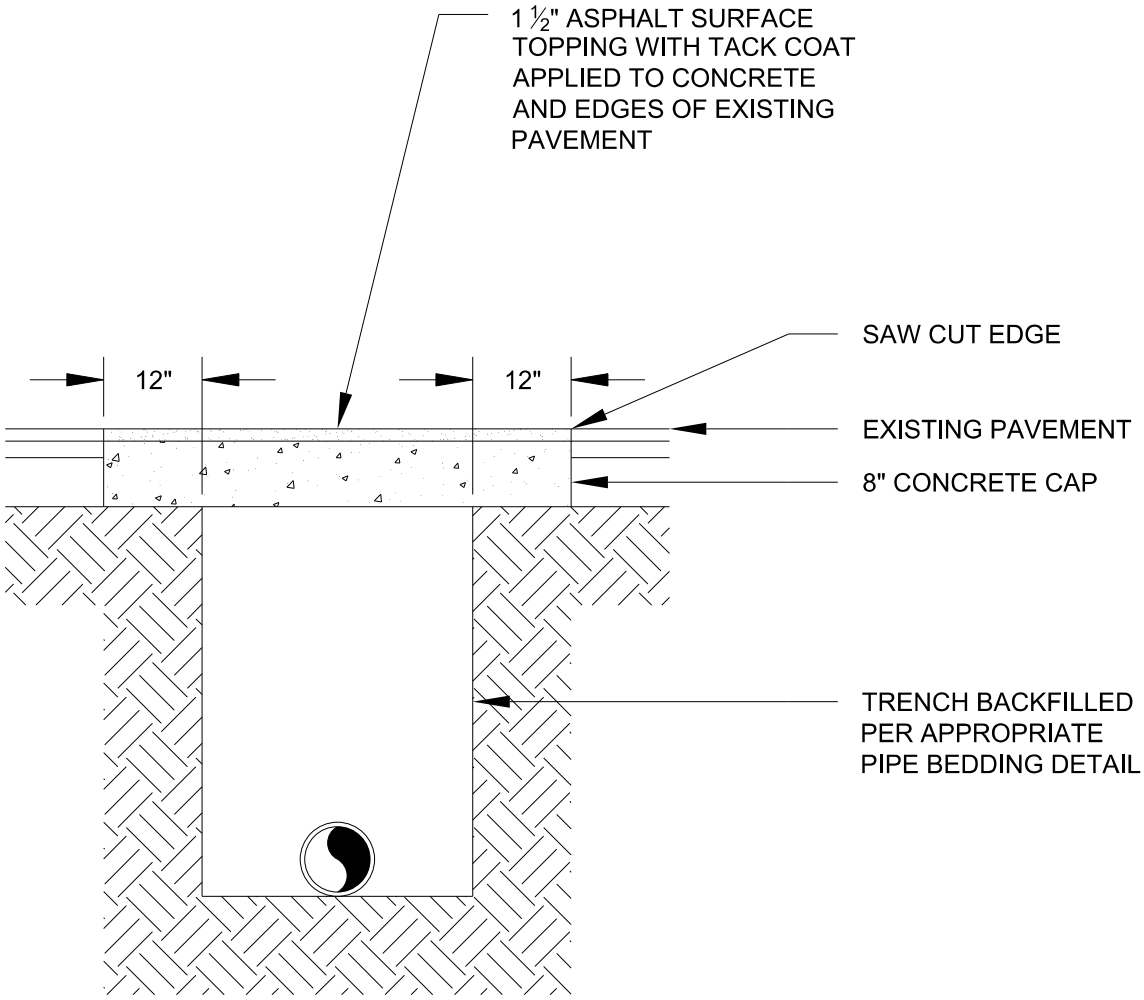

NOTES:

1. THIS DETAIL IS THE MINIMUM PAVEMENT REPAIR REQUIREMENT. HENRY COUNTY DOT OR GEORGIA DOT PAVEMENT REPAIR DETAILS SHALL SUPERCEDE THIS DETAIL AND SHALL BE USED WHERE APPLICABLE.

2. CONCRETE FOR CONCRETE CAP SHALL HAVE A MINIMUM COMPRESSIVE STRENGTH OF 2,500 PSI @ 28 DAYS.

HENRY COUNTY WATER AUTHORITY

PAVEMENT REPAIR

REVISED: 01/01/2012

SCALE: N.T.S.

DETAIL NO.

S34

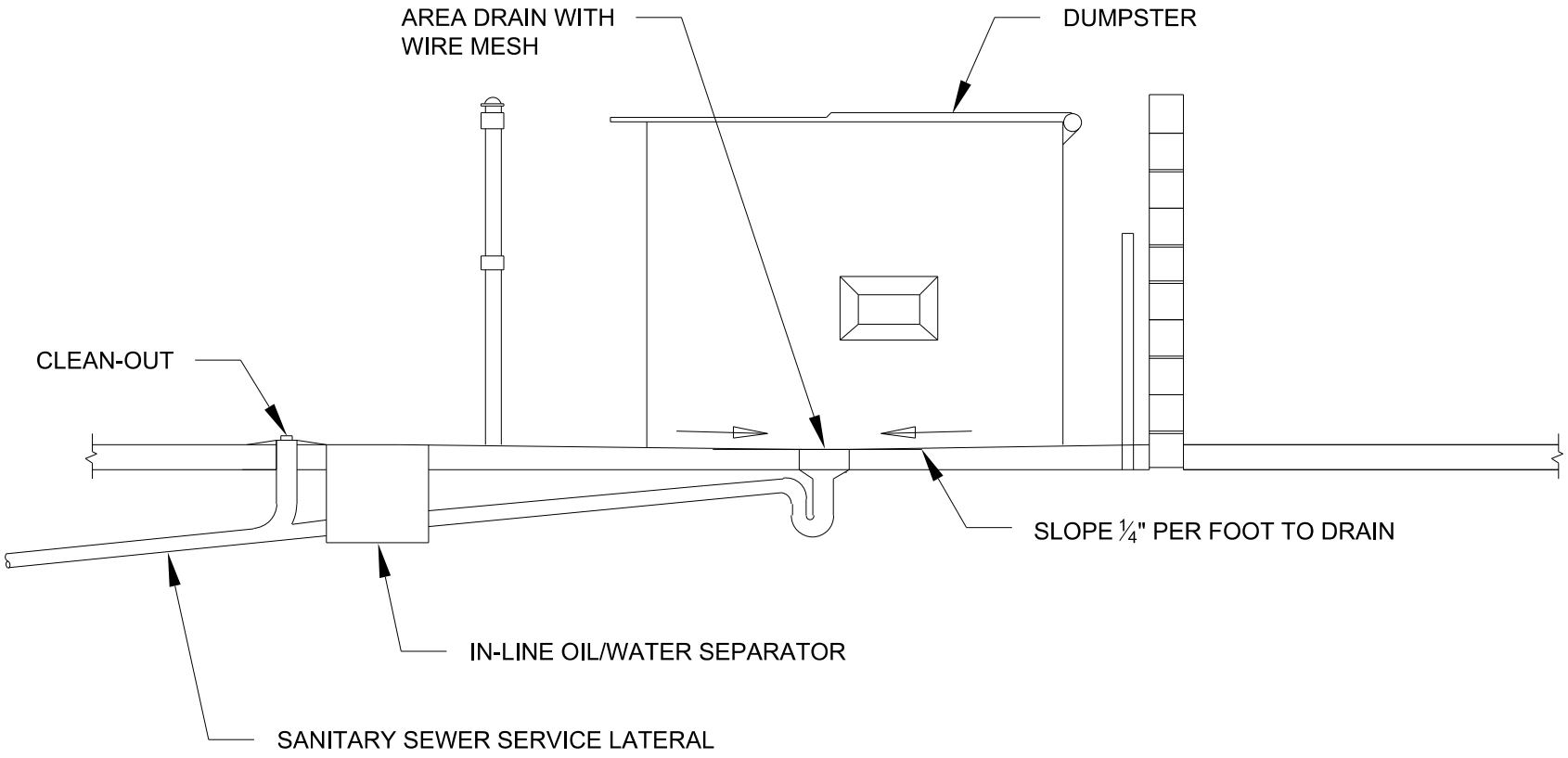

NOTES:

1. THE OIL/WATER SEPARATOR THAT IS USED SHALL BE PRE-APPROVED BY HCWA OR CONNECT TO GREASE INTERCEPTOR.

HENRY COUNTY WATER AUTHORITY

SANITARY SEWER CONNECTION FOR DUMPSTER PAD

REVISED: 01/01/2012

SCALE: N.T.S.

DETAIL NO.

S35

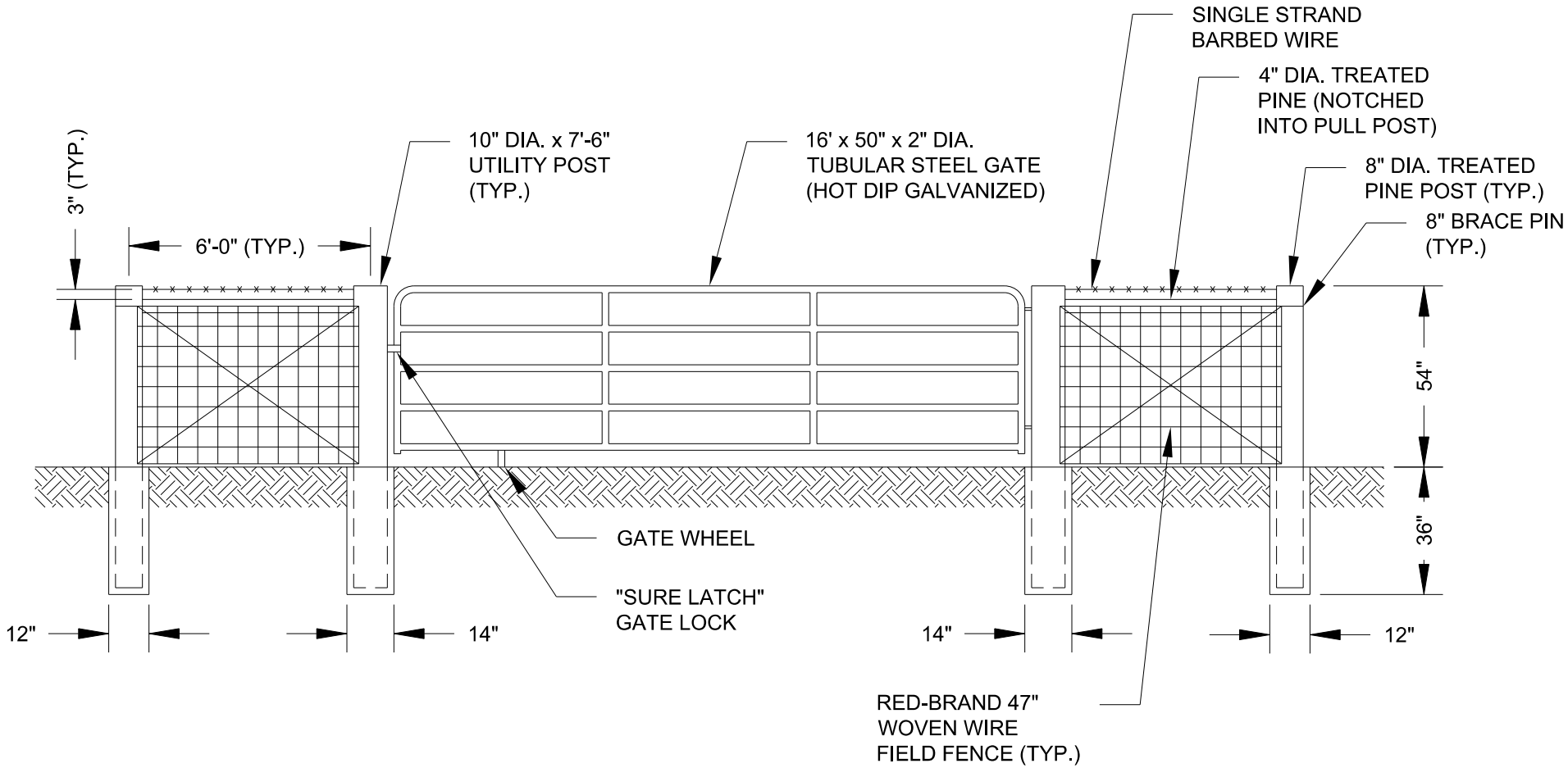

NOTES:

1. FENCE POSTS SHALL BE EMBEDDED IN CLASS "B" CONCRETE.
2. WOVEN WIRE FIELD FENCE SHALL BE ATTACHED TO FENCE POSTS WITH 1 ¼" GALVANIZED STAPLES.

HENRY COUNTY WATER AUTHORITY

SEWER EASEMENT ACCESS GATE

REVISED: 01/01/2012

SCALE: N.T.S.

DETAIL NO.

S36

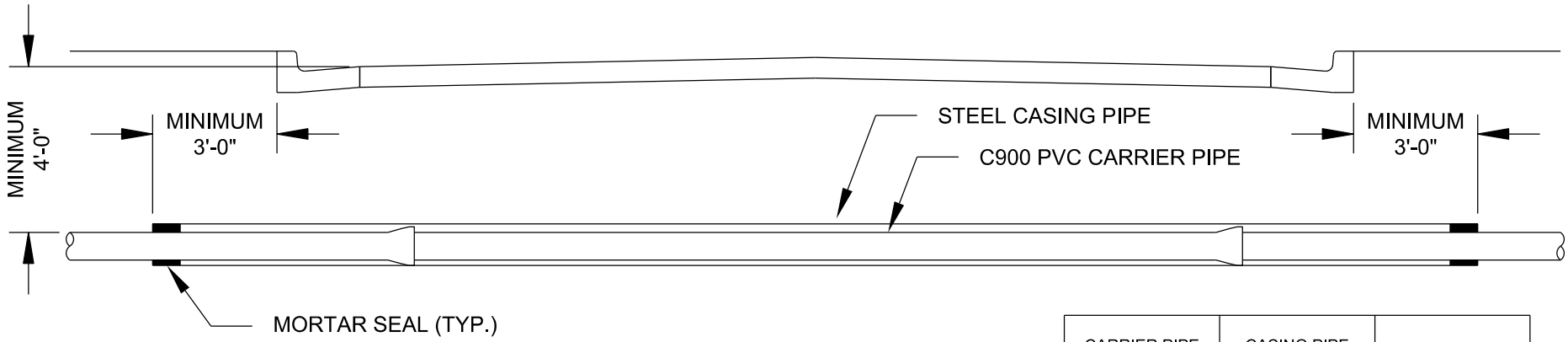

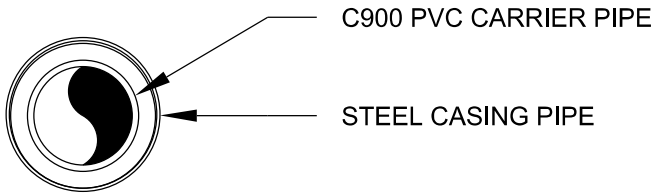

CARRIER PIPE NOMINAL DIAMETER (IN)	CASING PIPE NOMINAL DIAMETER (IN)	CASING PIPE THICKNESS (IN)
8	12	0.2500
10	16	0.2500
12	18	0.3130
16	24	0.3750

NOTES:

1. ENDS OF CASING PIPE SHALL BE SEALED WITH CEMENT MORTAR.
2. ALL COUNTY ROAD CROSSINGS SHALL BE INSTALLED IN ACCORDANCE WITH HENRY COUNTY DOT STANDARDS AND PERMIT REQUIREMENTS.
3. ALL STATE HIGHWAY CROSSINGS SHALL BE INSTALLED IN ACCORDANCE WITH GEORGIA DOT STANDARDS AND PERMIT REQUIREMENTS.
4. ALL RAILROAD CROSSINGS SHALL BE INSTALLED IN ACCORDANCE WITH AMERICAN RAILWAY ENGINEERING ASSOCIATION REGULATIONS AND IN ACCORDANCE WITH PERMIT REQUIREMENTS.

HENRY COUNTY WATER AUTHORITY

TYPICAL JACK AND BORE DETAIL SANITARY SEWER FORCE MAIN

REVISED: 09/14/2018

SCALE: N.T.S.

DETAIL NO.

S37